Body Repairs

Polo Classic 1996 ➤
Polo Variant 1998 ➤

Edition 03.2003

Protected by copyright. Copying for private or commercial purposes, in part or in whole, is not permitted unless authorised by Volkswagen AG. Volkswagen AG does not guarantee or accept any liability with respect to the correctness of information in this document. Copyright by Volkswagen AG.

satelettronica

Repair Group overview for Body Repairs

Protected by copyright. Copying for private or commercial purposes, in part or in whole, is not permitted unless authorised by Volkswagen AG. Volkswagen AG does not guarantee or accept any liability with respect to the correctness of information in this document. Copyright by Volkswagen AG.

Repair Group

00 - Technical data
50 - Body - front
51 - Body - centre
53 - Body - rear

satelettronica

Technical information should always be available to the foremen and mechanics, because their careful and constant adherence to the instructions is essential to ensure vehicle road-worthiness and safety. In addition, the normal basic safety precautions for working on motor vehicles must, as a matter of course, be observed.

All rights reserved.
No reproduction without prior agreement from publisher.

Copyright © 2010 Volkswagen AG, Wolfsburg

Contents

00 - Technical data 1
- **1 Vehicle identification data** 1
- 1.1 Type plate and vehicle identification number 1
- 1.2 Vehicle data plate 1
- **2 Body dimensions** 2
- 2.1 Body - front 2
- 2.2 Body - centre 5
- 2.3 Body - rear 9
- 2.4 Floor group 11
- **3 Body panel gaps/shut lines** 14
- 3.1 Body - front 14
- 3.2 Body - centre 15
- 3.3 Body - rear 16
- **4 Straightening jig** 17
- 4.1 Overview 17
- **5 Galvanized body parts** 25

50 - Body - front 26
- **1 Renewing wishbone support** 26
- 1.1 Removing 26
- **2 Renewing upper wheel housing longitudinal member** 28
- 2.1 Removing 28
- **3 Renewing front wheel housing** 30
- 3.1 Removing 30
- **4 Renewing front wheel housing - partial renewal** 32
- 4.1 Removing 32
- **5 Renewing front longitudinal member** 34
- 5.1 Removing 34
- **6 Renewing front longitudinal member** 36
- 6.1 Removing 36

51 - Body - centre 38
- **1 Renewing roof** 38
- 1.1 Removing 38
- **2 Renewing roof (estate)** 40
- 2.1 Removing 40
- 2.2 Renewing T-pins for roof moulding 42
- **3 Renewing front roof cross member** 44
- 3.1 Removing 44
- **4 Renewing rear roof cross member** 46
- 4.1 Removing 46
- **5 Renewing rear roof cross member (estate)** 48
- 5.1 Removing 48
- **6 Renewing outer side panel - partial renewal** 50
- 6.1 Removing 50
- **7 Renewing outer side panel - partial renewal (estate)** 53
- 7.1 Removing 53
- **8 Renewing inner side panel (estate)** 56
- 8.1 Includes: D-pillar 56
- **9 Renewing A-pillar** 59

Protected by copyright. Copying for private or commercial purposes, in part or in whole, is not permitted unless authorised by Volkswagen AG. Volkswagen AG does not guarantee or accept any liability with respect to the correctness of information in this document. Copyright by Volkswagen AG.
satelettronica

9.1 Removing . . . 59
10 Renewing B-pillar . . . 62
10.1 Removing . . . 62
11 Renewing outer side member . . . 65
11.1 Removing . . . 65
12 Renewing outer side panel - partial renewal . . . 68
12.1 Removing . . . 68
13 Renewing inner side member - partial renewal . . . 70
13.1 Removing . . . 70
14 Renewing floor panel . . . 72
14.1 Removing . . . 72

53 - Body - rear . . . 78

1 Renewing rear cross panel . . . 78
1.1 Removing . . . 78
2 Renewing rear cross panel (estate) . . . 81
2.1 Removing . . . 81
3 Renewing tail light mounting . . . 85
3.1 Removing . . . 85
4 Renewing tail light mounting (estate) . . . 87
4.1 Removing . . . 87
5 Renewing intermediate piece . . . 89
5.1 Removing . . . 89
6 Renewing intermediate piece (estate) . . . 92
6.1 Includes: bracket for tensioning strap and cross member . . . 92
7 Renewing luggage compartment floor, part section . . . 96
7.1 Removing . . . 96
8 Renewing web plate (estate) . . . 99
8.1 Includes: cross member . . . 99
9 Renewing rear longitudinal member - partial renewal . . . 101
9.1 Removing . . . 101
10 Renewing rear longitudinal member . . . 103
10.1 Includes: web plate . . . 103
11 Renewing side panel . . . 105
11.1 Removing . . . 105
12 Renewing side panel (estate) . . . 108
12.1 Removing . . . 108
13 Renewing rear wheel housing . . . 111
13.1 Removing . . . 111
14 Renewing rear wheel housing (estate) . . . 114
14.1 Removing . . . 114
15 Renewing outer wheel housing liner . . . 118
15.1 Removing . . . 118
16 Renewing wheel housing liner (estate) . . . 120
16.1 Removing . . . 120
17 Renewing mounting plate (estate) . . . 122
17.1 Removing . . . 122
18 Renewing rear cross member (estate) . . . 124
18.1 Removing . . . 124

Protected by copyright. Copyright by Volkswagen AG. Volkswagen AG does not guarantee or accept any liability with respect to the correctness of information in this document. Copyright by Volkswagen AG. Volkswagen AG does not permit unauthorised use in part or in whole, not permitted for commercial purposes.
satelettronica

00 – Technical data

1 Vehicle identification data

1.1 Type plate and vehicle identification number

The vehicle identification number (chassis number) is stamped on the rear cross panel of engine compartment. It can be seen through a window in the plenum chamber cover.

The type plate is attached to the plenum chamber behind the right-hand suspension strut dome.

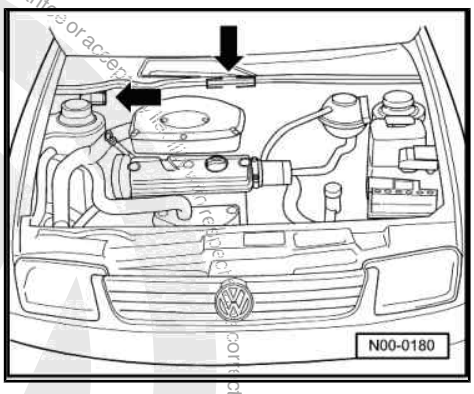

1.2 Vehicle data plate

The vehicle data plate is located on the left on the roof member near the wing door on the panel van and behind the left side panel trim in the luggage compartment in the Kombi.

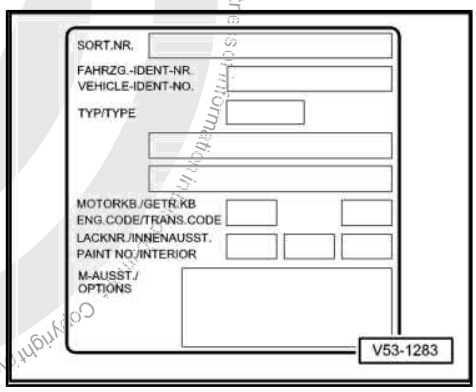

Protected by copyright. Copying for private or commercial purposes, in part or in whole is not permitted unless authorised by Volkswagen AG. Volkswagen AG does not guarantee or accept any liability with respect to the correctness of information in this document. Copyright by Volkswagen AG.
satelettronica

2 Body dimensions

2.1 Body - front

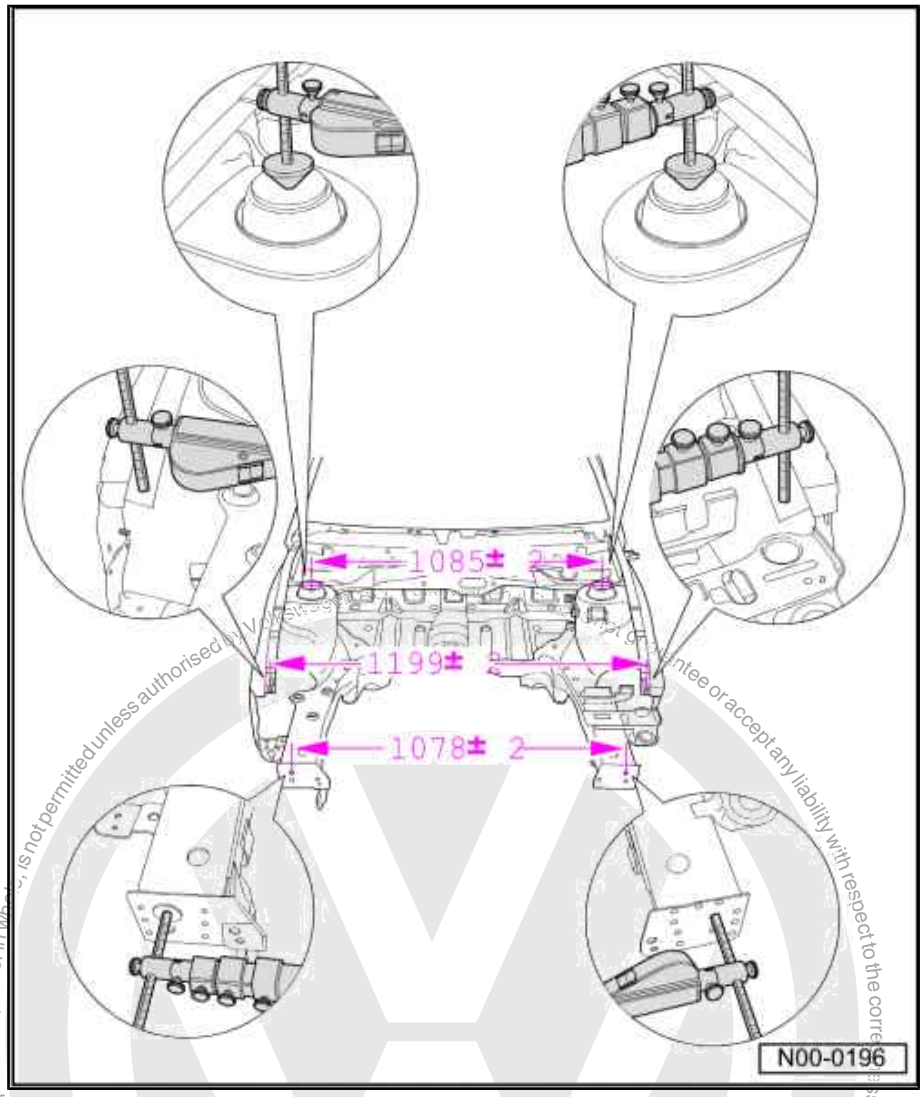

Dimension between suspension strut mountings

Dimension between wheel housing front upper corners

Dimension between front longitudinal members

Protected by copyright. Copying for private or commercial purposes, in part or in whole, is not permitted unless authorised by Volkswagen AG. Volkswagen AG does not guarantee or accept any liability with respect to the correctness of information in this document. Copyright by Volkswagen AG.
satelettronica

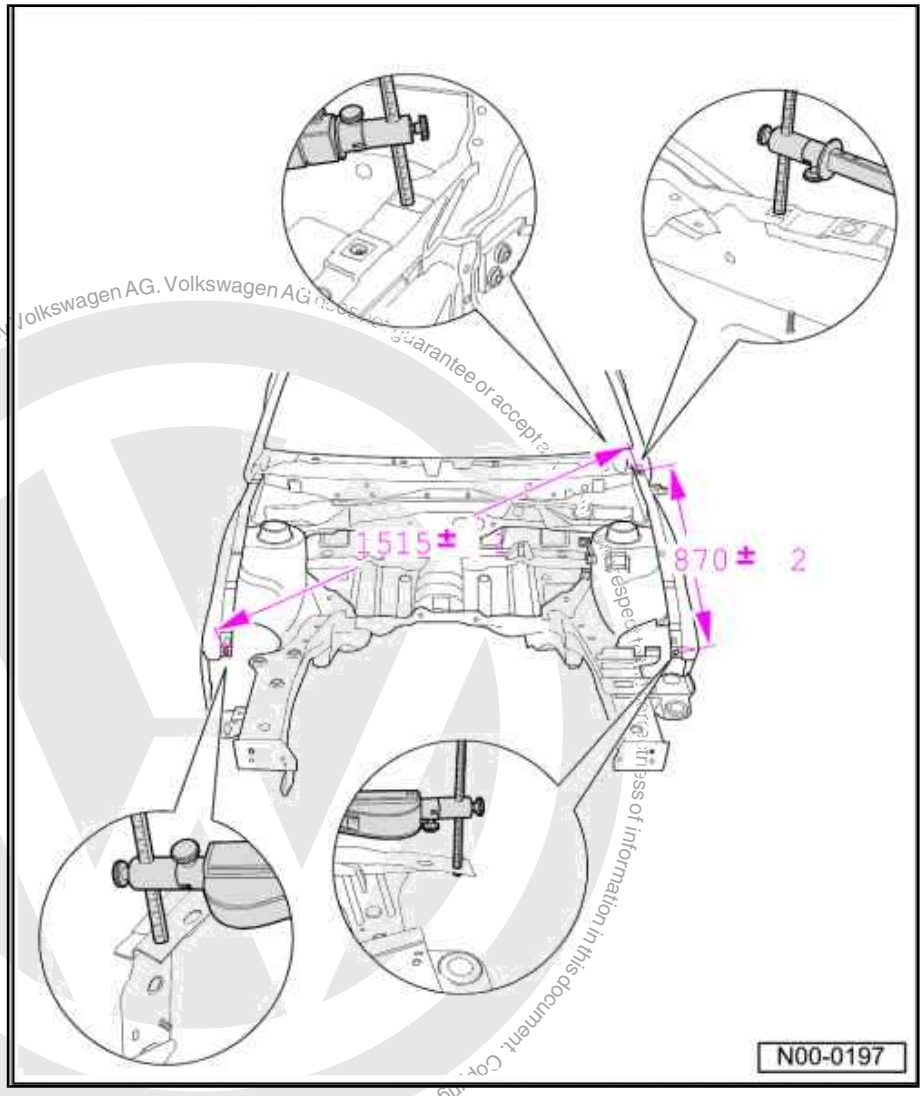

Volkswagen AG. Volkswagen AG does not guarantee or accept any liability with respect to the correctness of information in this document. Copyright by Volkswagen AG. Reproduced by copyright. Copying for private or commercial purposes, in part or in whole, is not permitted unless authorised by Volkswagen AG.

Diagonal dimension bonnet hinge mounting - wheel housing front upper corner

Dimension between bonnet hinge mounting and wheel housing front upper corner

satelettronica

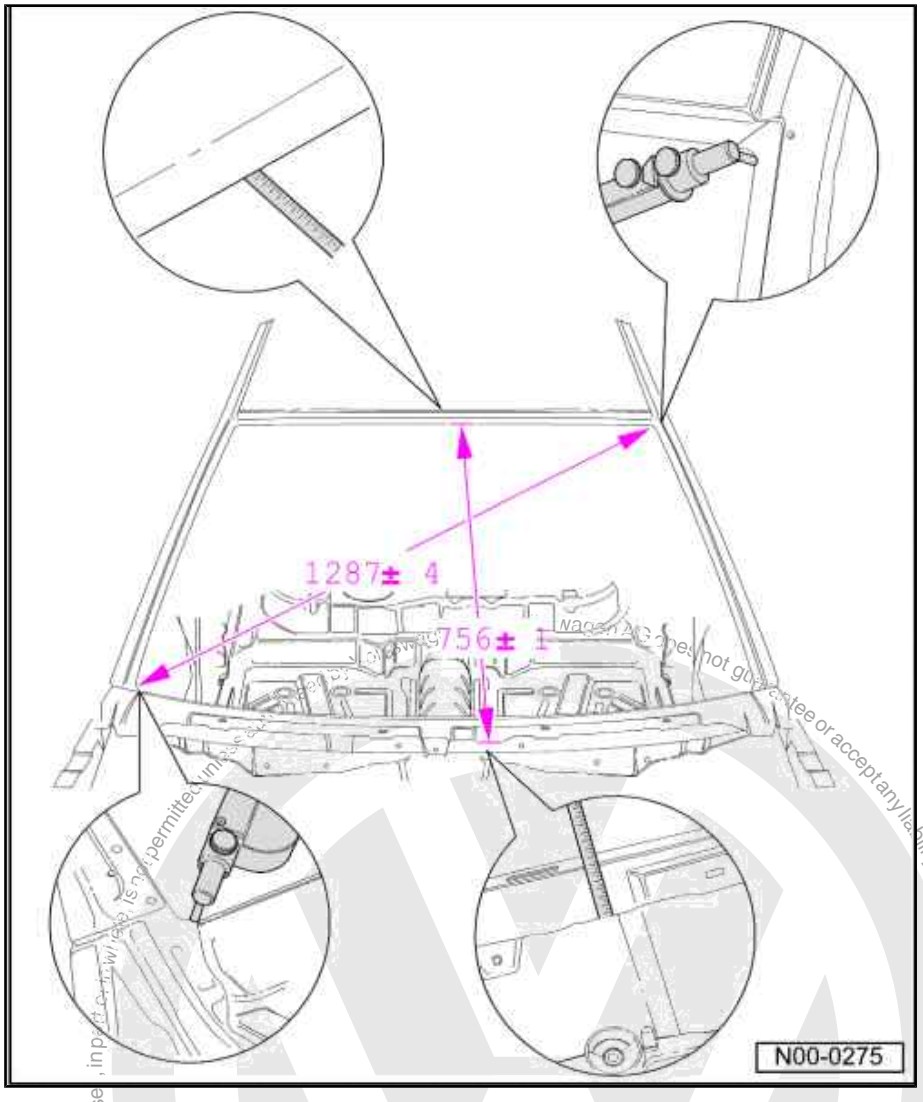

Protected by copyright. Copying for private or commercial purposes, in part or in whole, is not permitted unless authorised by Volkswagen AG. Volkswagen AG does not guarantee or accept any liability with respect to the correctness of information in this document. Copyright by Volkswagen AG.
satelettronica

Diagonal dimension windscreen aperture

Dimension plenum chamber flange - centre of roof flange

2.2 Body - centre

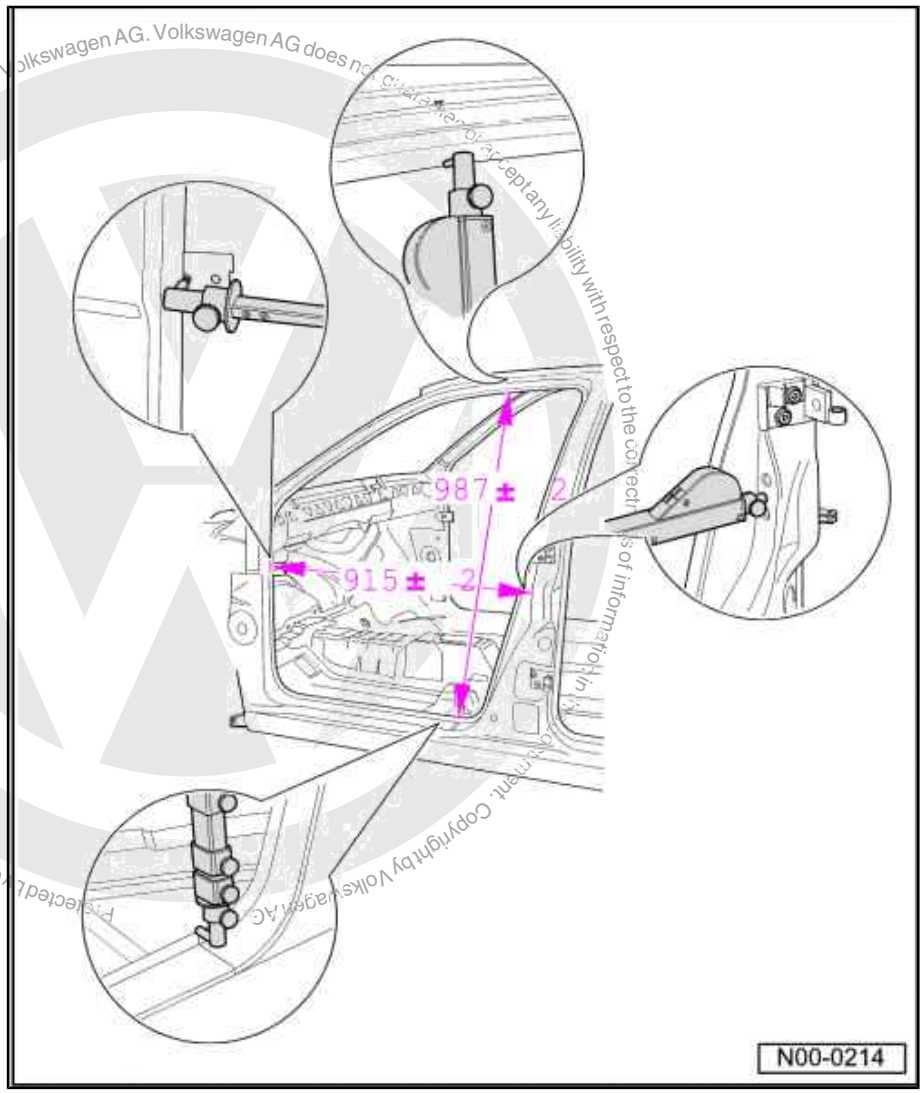

Protected by copyright. Copyright by Volkswagen AG.
Volkswagen AG. Volkswagen AG does not guarantee or accept any liability with respect to the correctness of information in this document. Copyright by Volkswagen AG.
satelettronica

Front door aperture

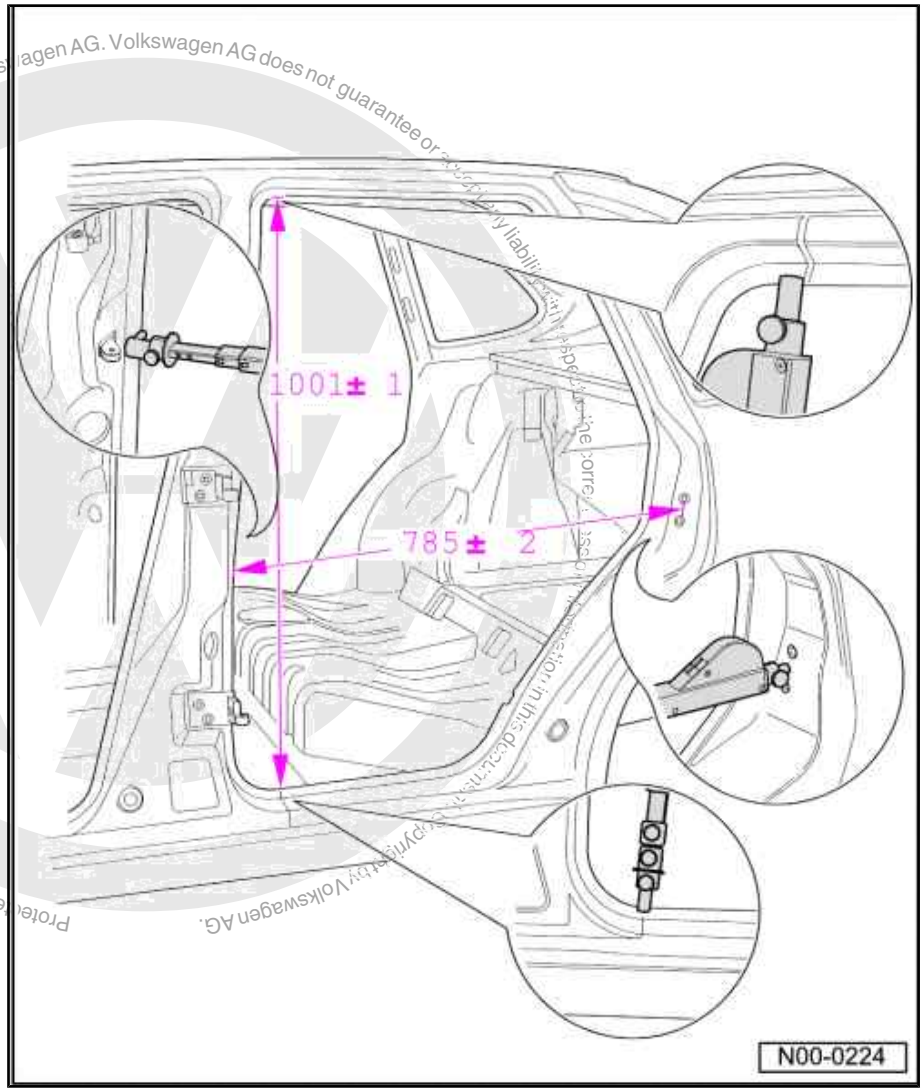

Protected by copyright. Copying for private or commercial purposes, in part or in whole, is not permitted unless authorised by Volkswagen AG. Volkswagen AG does not guarantee or accept any liability with respect to the correctness and completeness of information in this document. Copyright by Volkswagen AG.

Rear door aperture

satelettronica

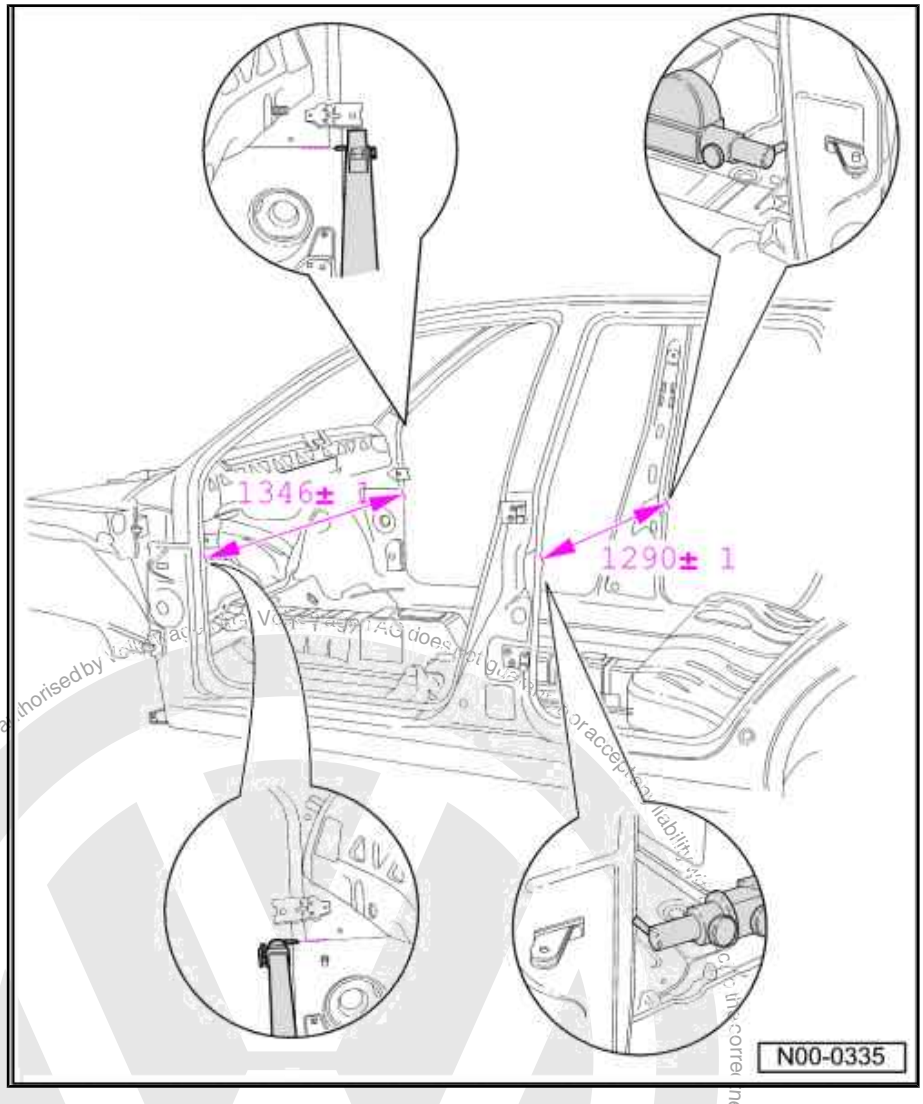

Dimension between A-pillars

Dimension between B-pillars

Protected by copyright. Copying for private or commercial purposes, in part or in whole, is not permitted unless authorised by Volkswagen AG. Copyright by Volkswagen AG.
satelettronica

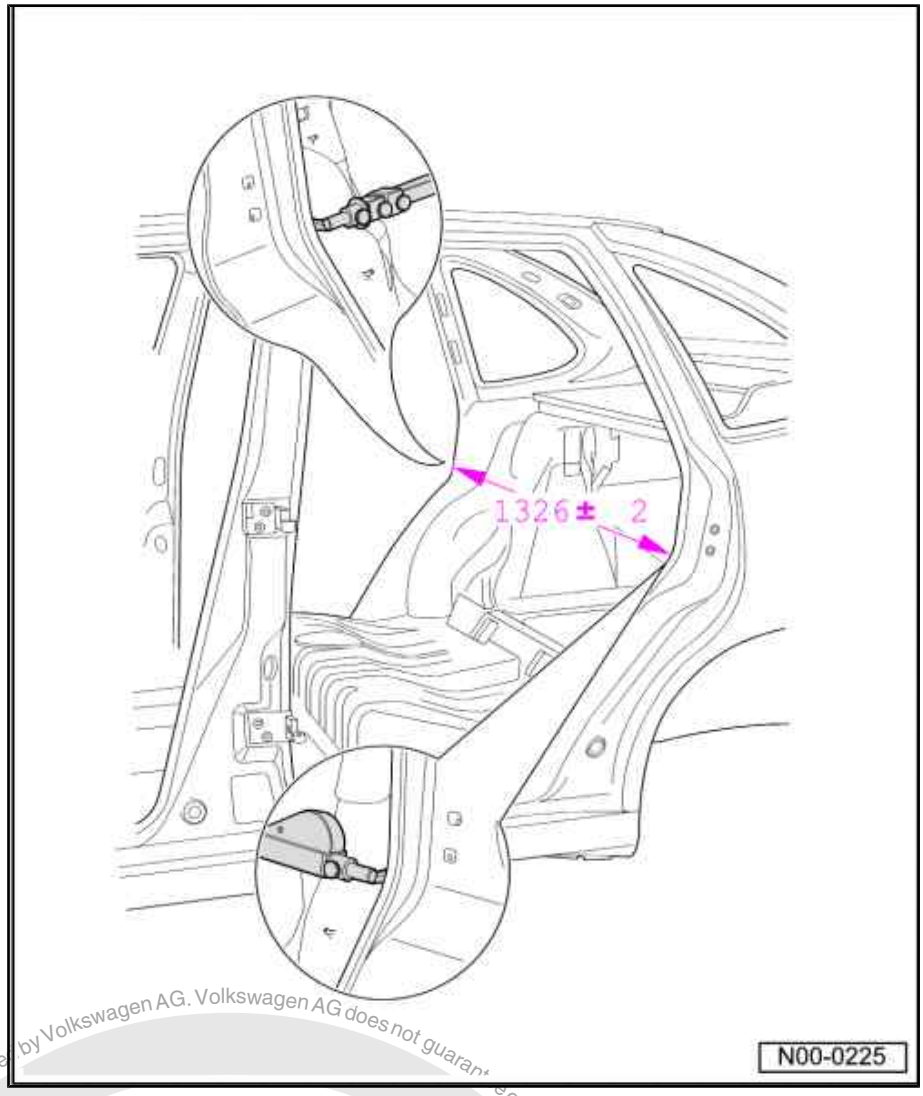

Protected by copyright. Copying for private or commercial purposes, in part or in whole, is not permitted unless authorised by Volkswagen AG. Volkswagen AG does not guarantee or accept any liability with respect to the correctness of information in this document. Copyright by Volkswagen AG.

satelettronica

Dimension between C-pillars

2.3 Body - rear

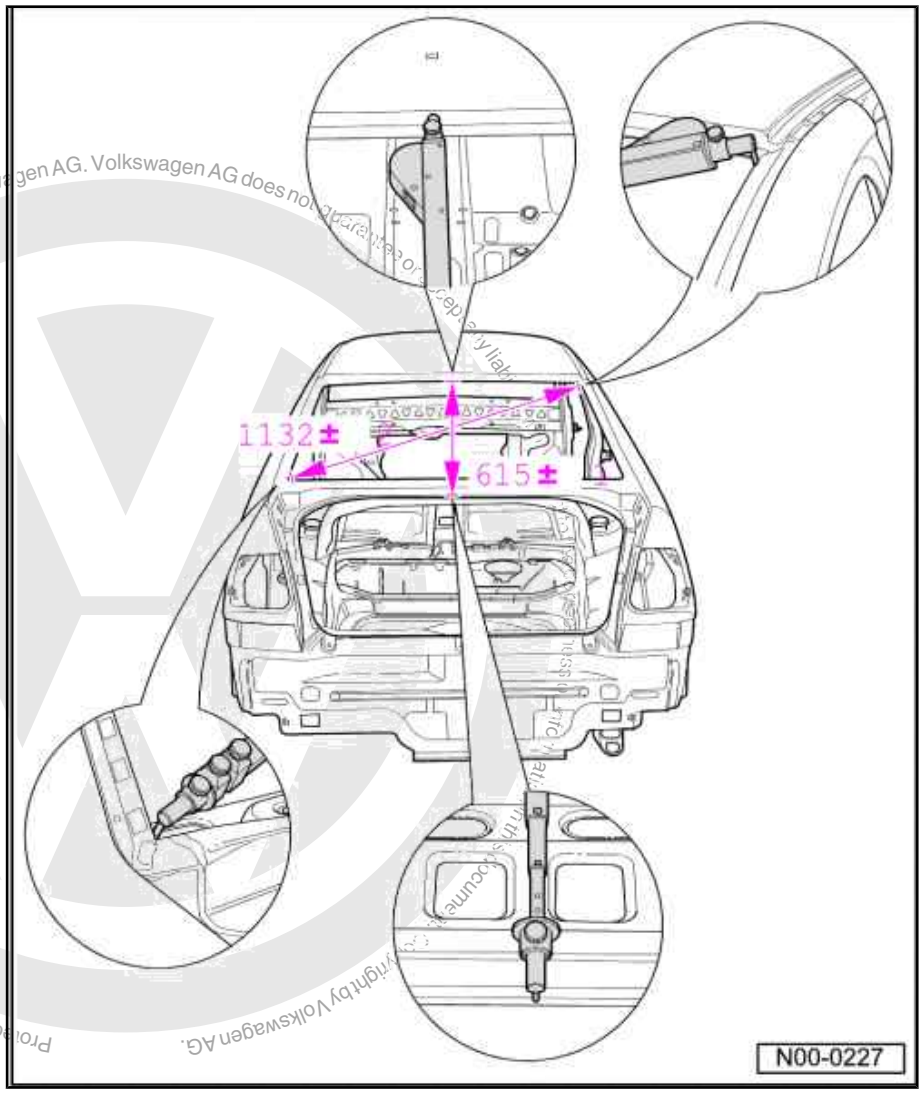

Diagonal dimension rear window aperture

Top of window aperture - top of luggage compartment aperture

Protected by copyright. Copying for private or commercial purposes, in part or in whole, is not permitted unless authorised by Volkswagen AG. Volkswagen AG does not guarantee or accept any liability with respect to the correctness and completeness of this document. Copyright by Volkswagen AG.
satelettronica

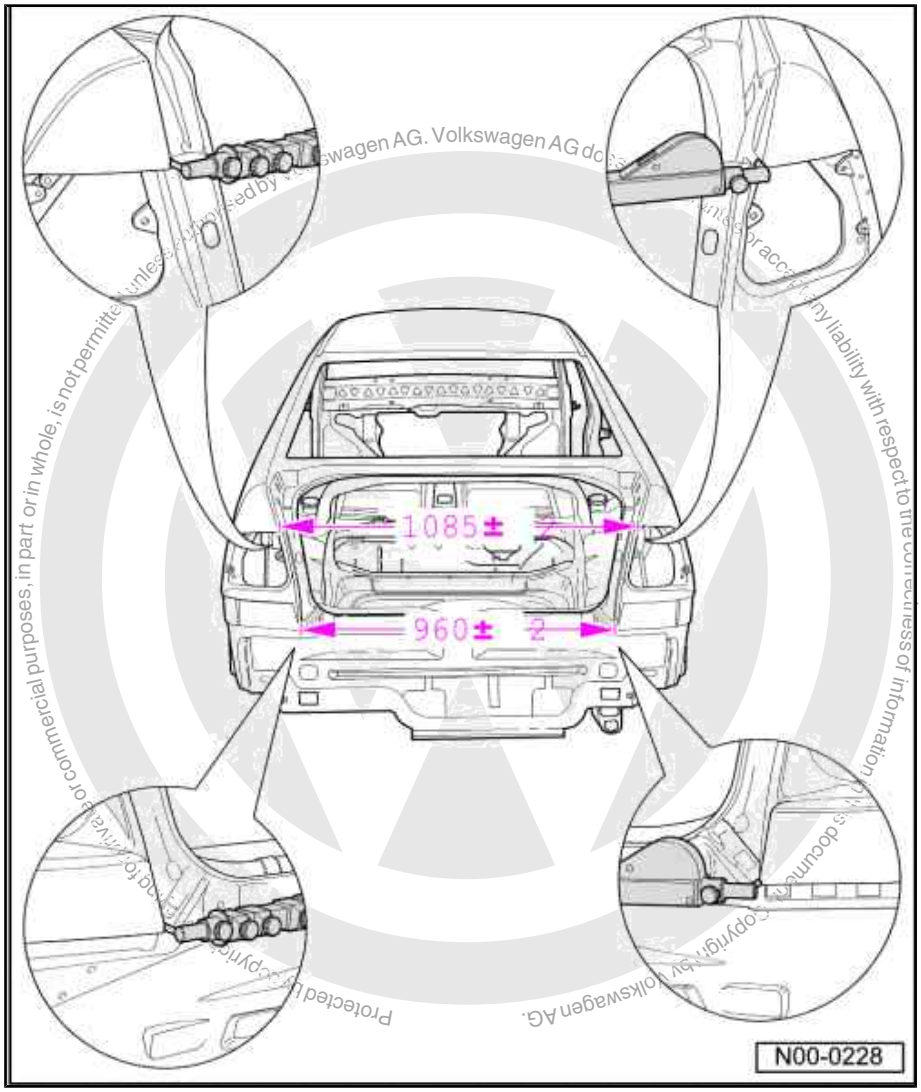

satelettronica

Distance between top of side panels

Distance between bottom of side panels

2.4 Floor group

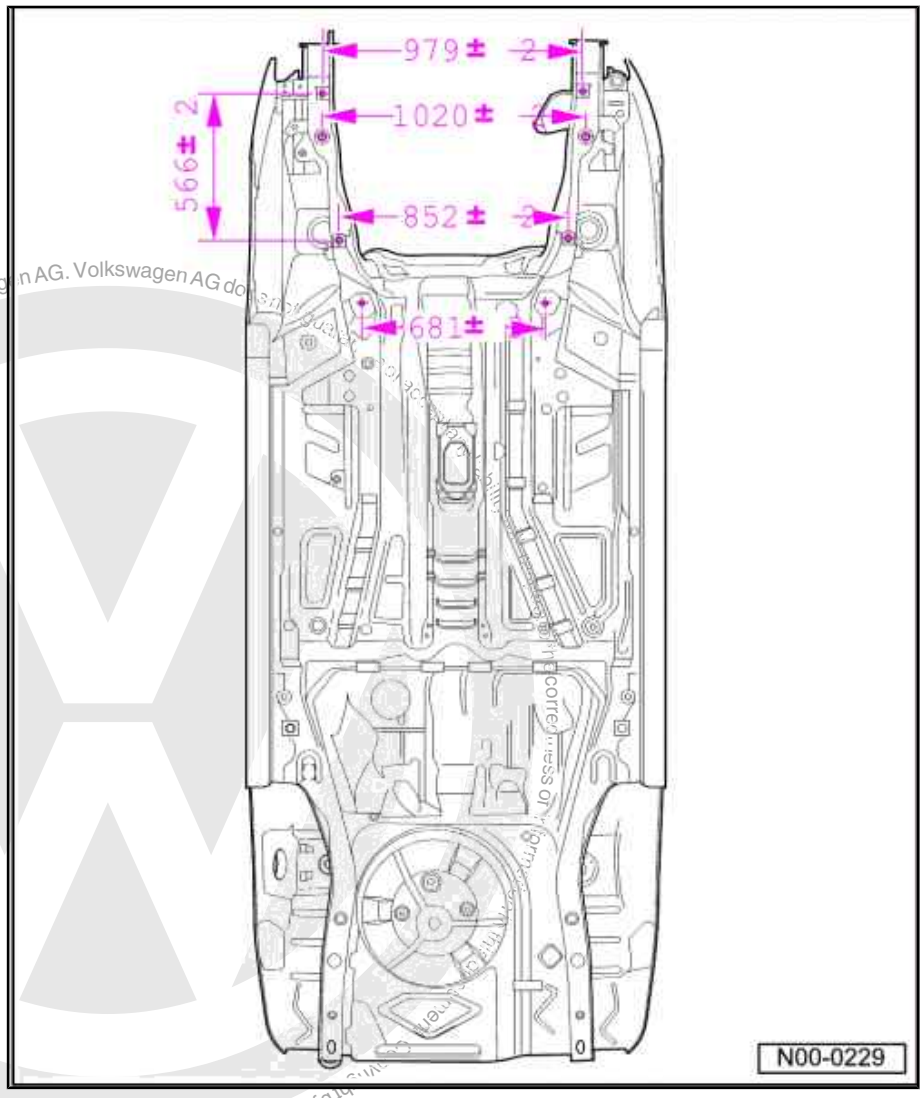

Protected by copyright. Copying for private or commercial purposes, in part or in whole, is not permitted unless authorised by Volkswagen AG. Volkswagen AG does not guarantee the correctness of any data, information, measurements, illustrations, specifications and technical data.
Protected by Volkswagen AG.
satelettronica

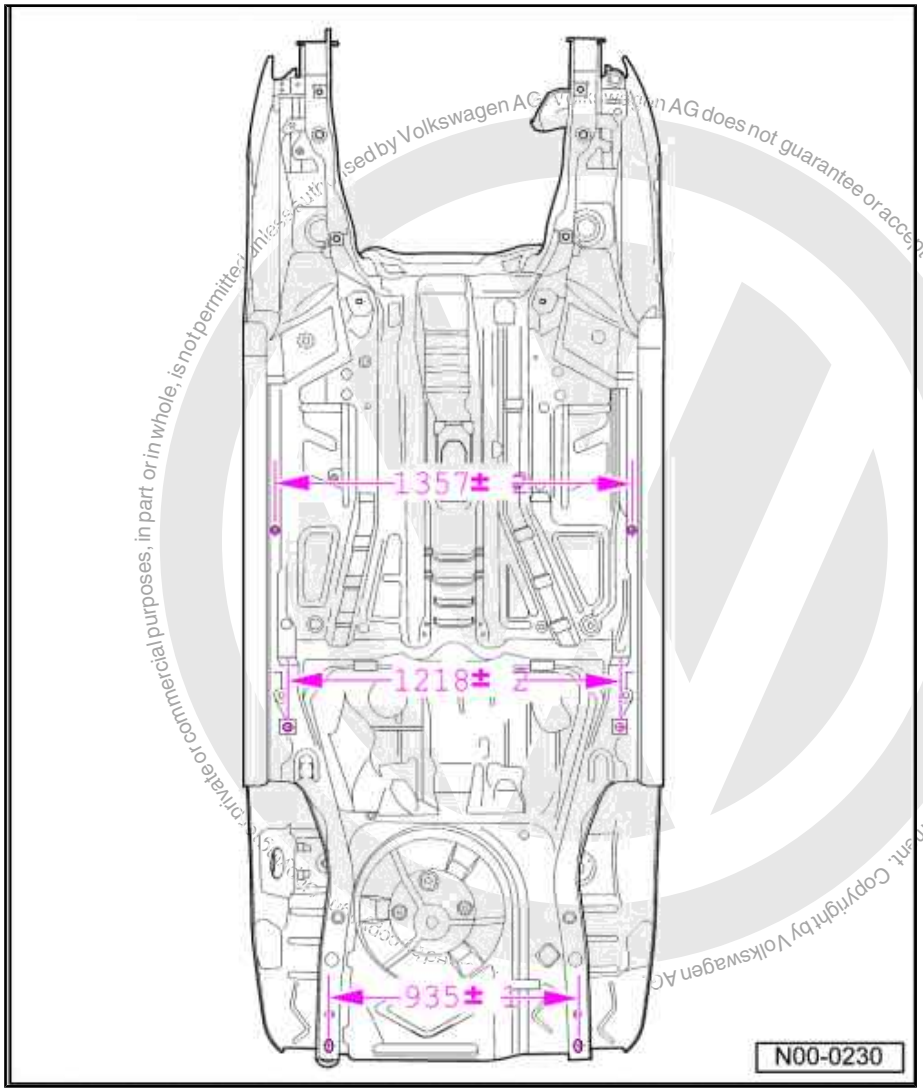

satelettronica

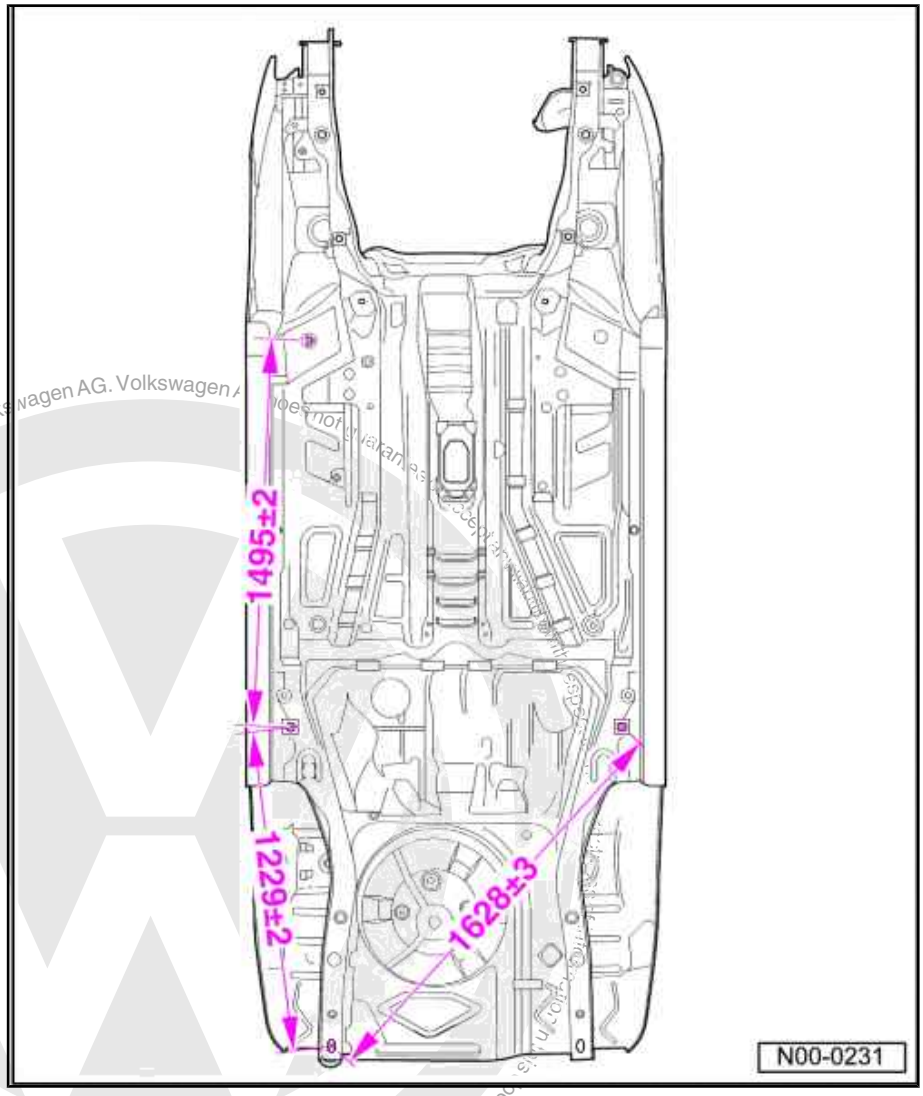

Protected by copyright. Copying for private or commercial purposes, in part or in whole, is not permitted unless authorised by Volkswagen AG. Volkswagen AG does not give any warranties regarding the accuracy of this document. Copyright by Volkswagen AG.
satelettronica

3 Body panel gaps/shut lines

Use special tool -3371- for checking or adjusting.

3.1 Body - front

A - 2 mm

B - 2 ±0.5 mm

C - 3 ±0.8 mm

D - 4 + 1 mm

E - 4 ±0.5 mm

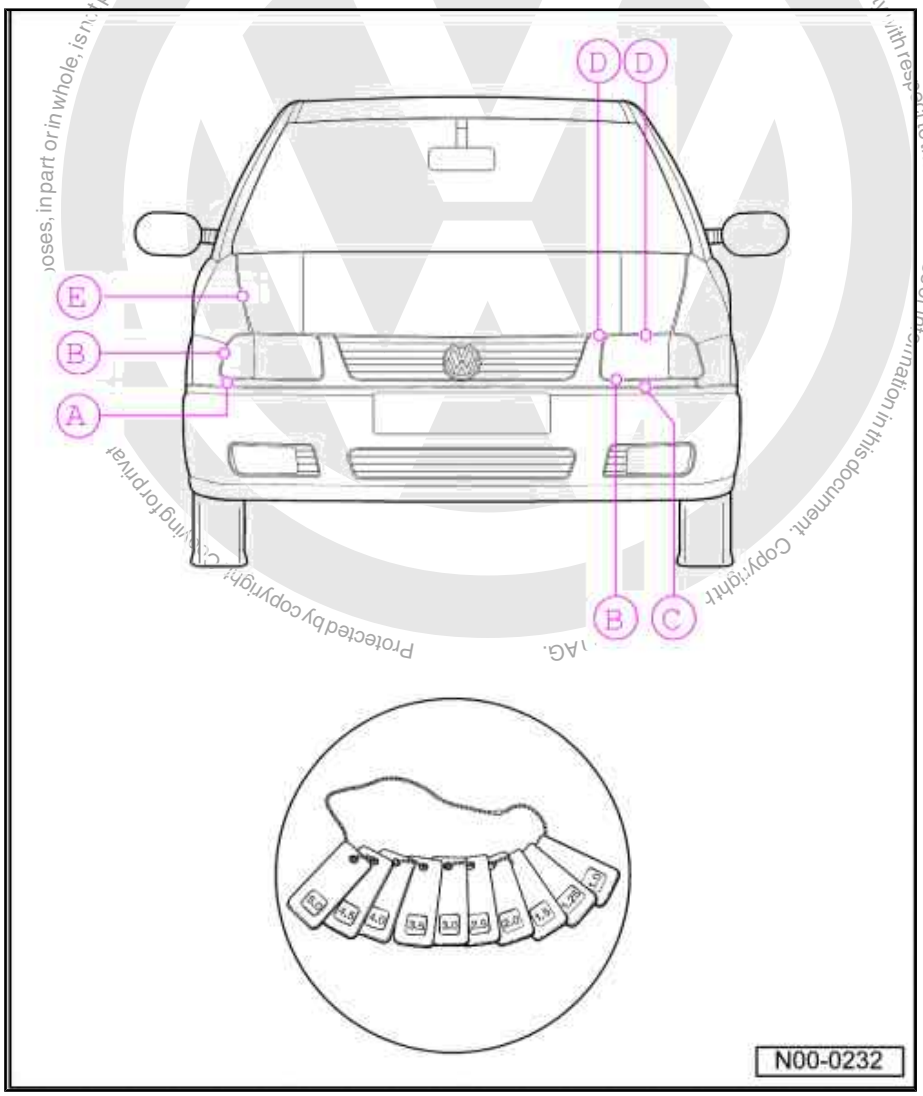

satelettronica

3.2 Body - centre

A - 1.5 ±0.5 mm
B - 2 ±0.5 mm
C - 3 ±0.5 mm
D - 3.5 ±0.5 mm
E - 5 ±0.5 mm
F - 5.5 ±0.5 mm
G - 6 ±0.5 mm
H - 7 ±0.5 mm

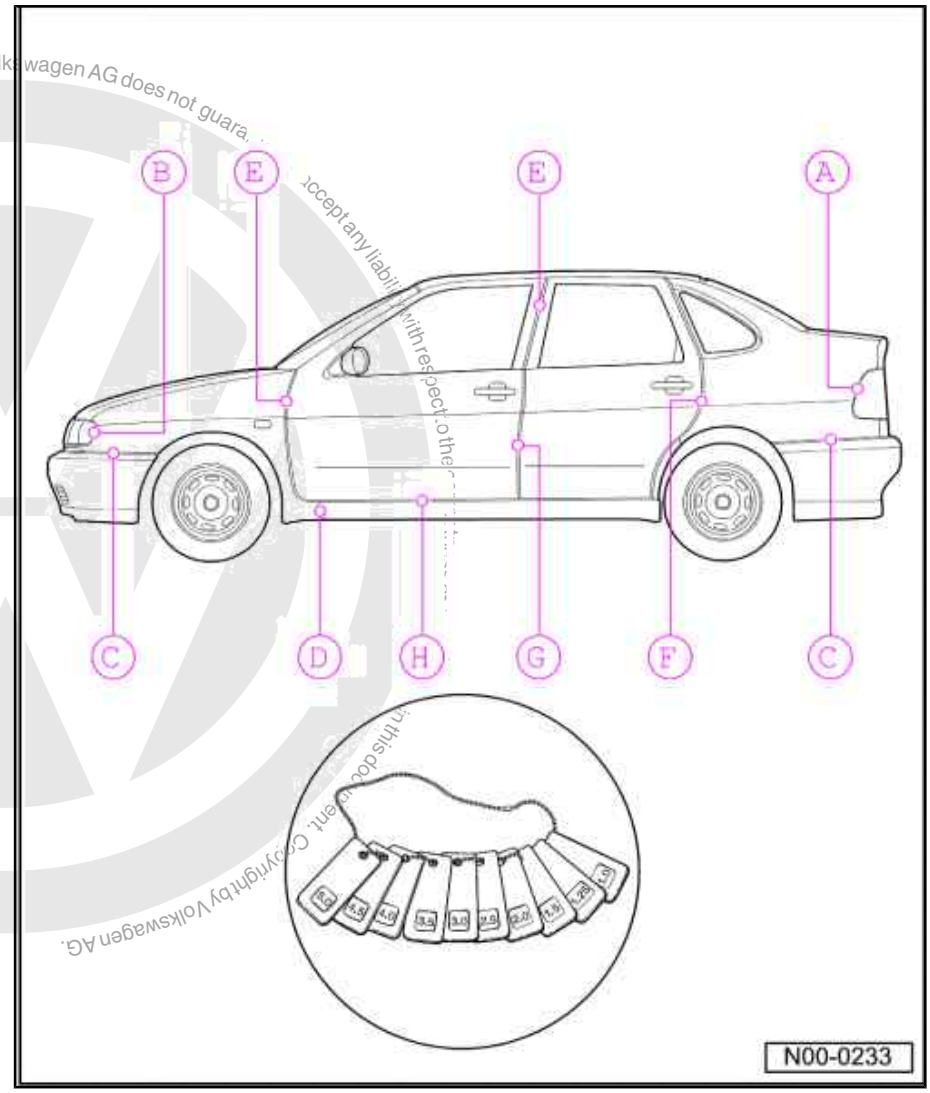

Protected by copyright. Copying for private or commercial purposes, in part or in whole, is not permitted unless authorised by Volkswagen AG. Volkswagen AG does not guarantee or accept any liability with respect to the correctness of information in this document. Copyright by Volkswagen AG.
satelettronica

3.3 Body - rear

A - 1.5 ±0.5 mm

B - 2.5 ±0.5 mm

C - 3.0 ±0.5 mm

D - 3.4 + 1 mm

E - 6.0 ±0.5 mm

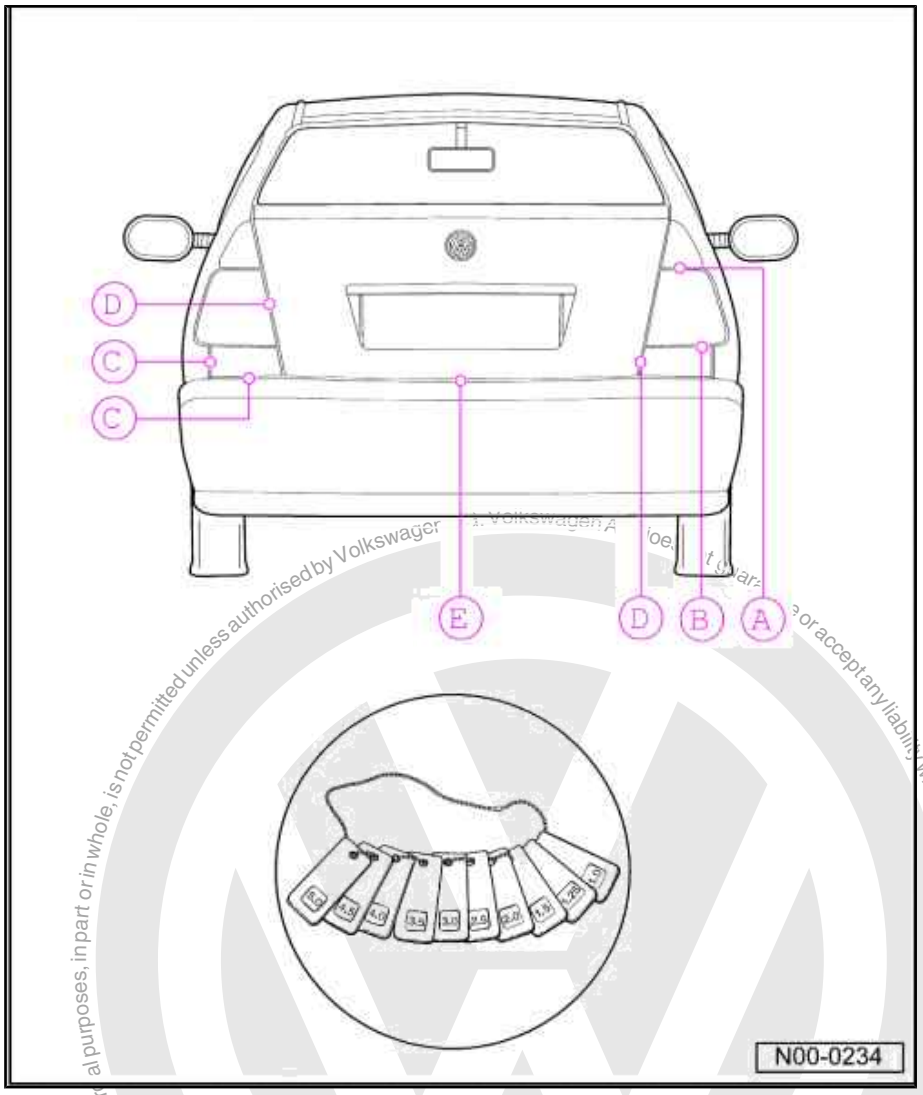

satelettronica

4 Straightening jig

4.1 Overview

Note

- *The item numbers in the figures are identical with the end numbers on the alignment bracket inserts:*
- *-VAS 5001-*
- *The required basic size is given for the alignment bracket mounting.*

1 - MZ 200 and TV 400

2 - Mounting -1- , MZ 200 and TV 400

4 - MZ 142 and TV 400

6 - Mounting -4- , MZ 142 and TV 400

8 - MZ 140

10 - MZ 602

11 - Centring piece, left and right identical

12 - MZ 080

14 - Distance piece, left and right identical

19 - Front production mounting, left and right identical

34 - MZ 080

36 - MZ 080 and mounting -34-

38 - MZ 260

40 - MZ 140

42 - MZ 080

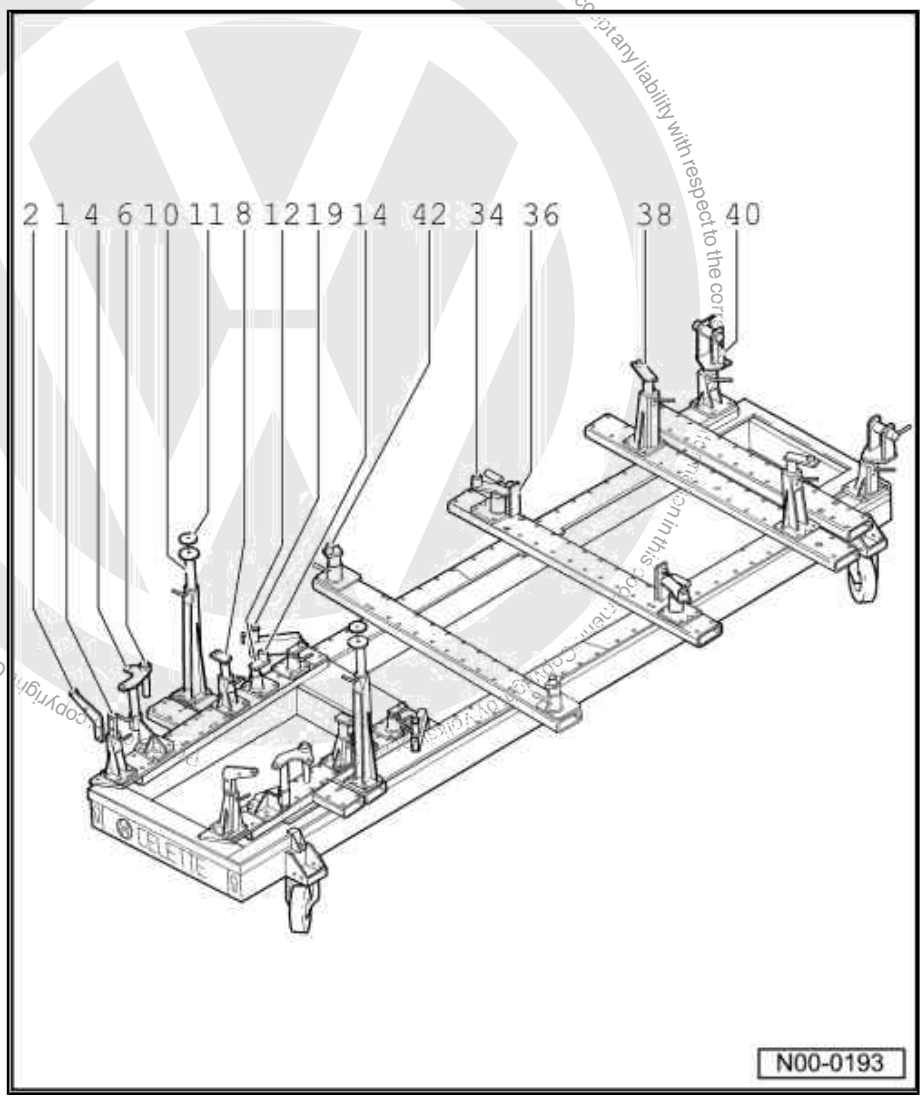

Overview - front alignment bracket positions

satelettronica

Copyright by Volkswagen AG. Volkswagen AG does not guarantee or accept any liability with respect to the correctness of information in this document. Copying for private or commercial purposes, in part or in whole, is not permitted unless authorised by Volkswagen AG.

2 - Front longitudinal member

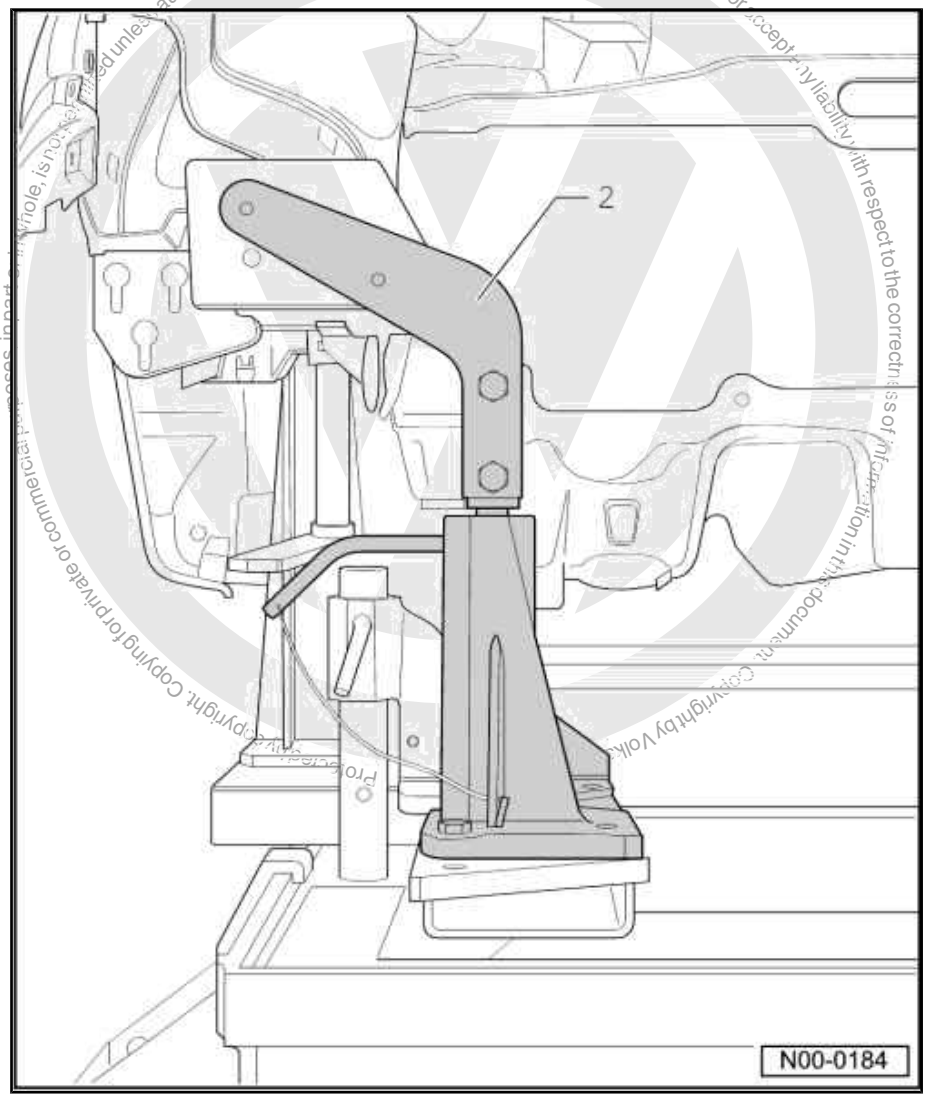

satelettronica

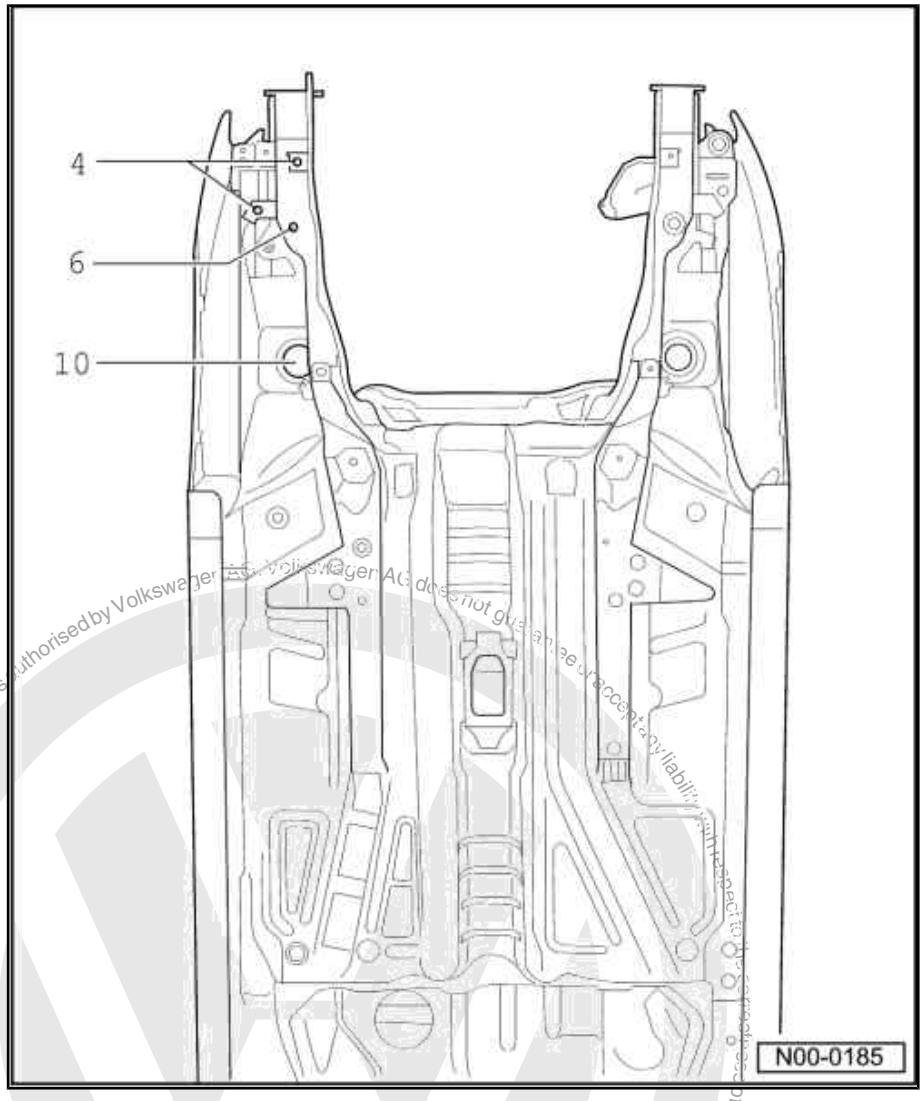

Overview - front alignment bracket positions

Protected by copyright. Copying for private or commercial purposes, in part or in whole, is not permitted unless authorised by Volkswagen AG. Volkswagen AG does not guarantee or accept any liability with respect to the correctness of information in this document. Copyright by Volkswagen AG.
satelettronica

4 - Engine bracket mounting

6 - Drilling in longitudinal member

10 - Suspension strut mounting

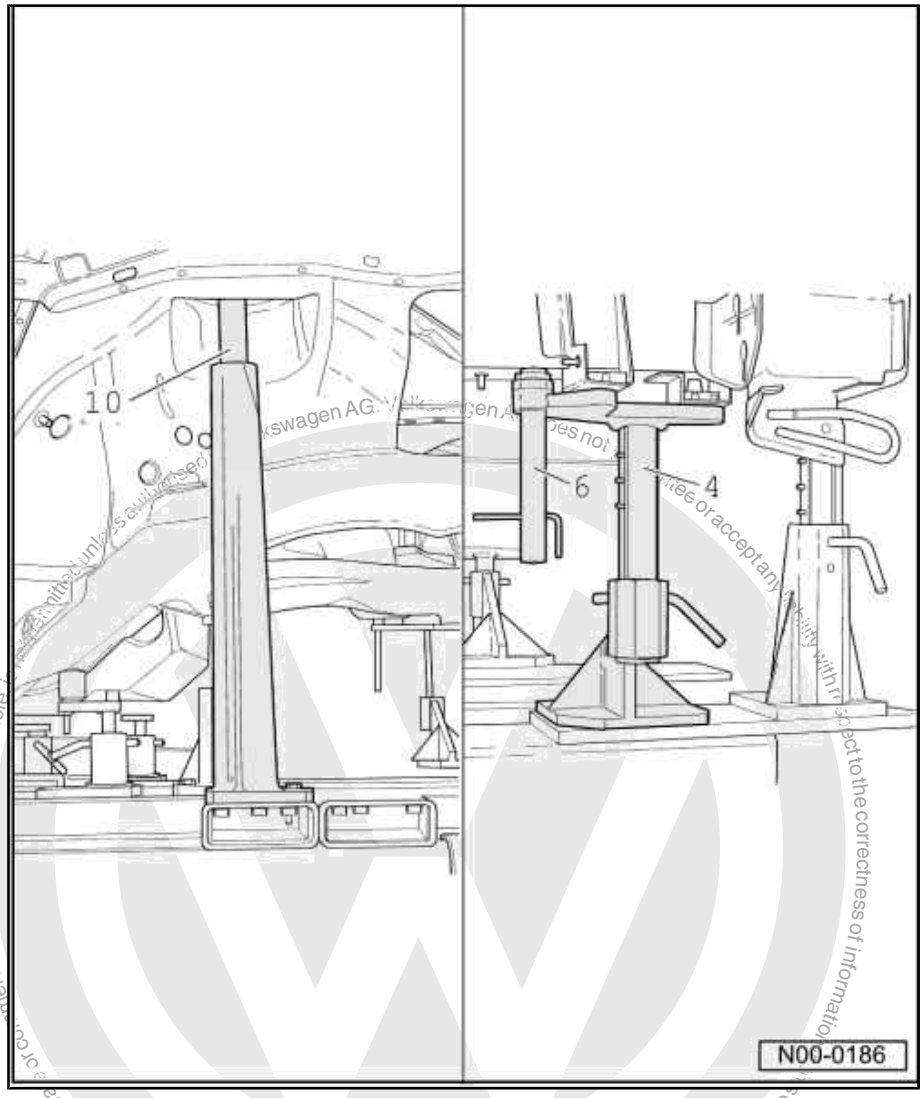

Protected by copyright. Copying for private or commercial purposes, in part or in whole, is not permitted unless authorised by Volkswagen AG. Volkswagen AG does not guarantee or accept any liability with respect to the correctness of information in this document. Copyright by Volkswagen AG.
satelettronica

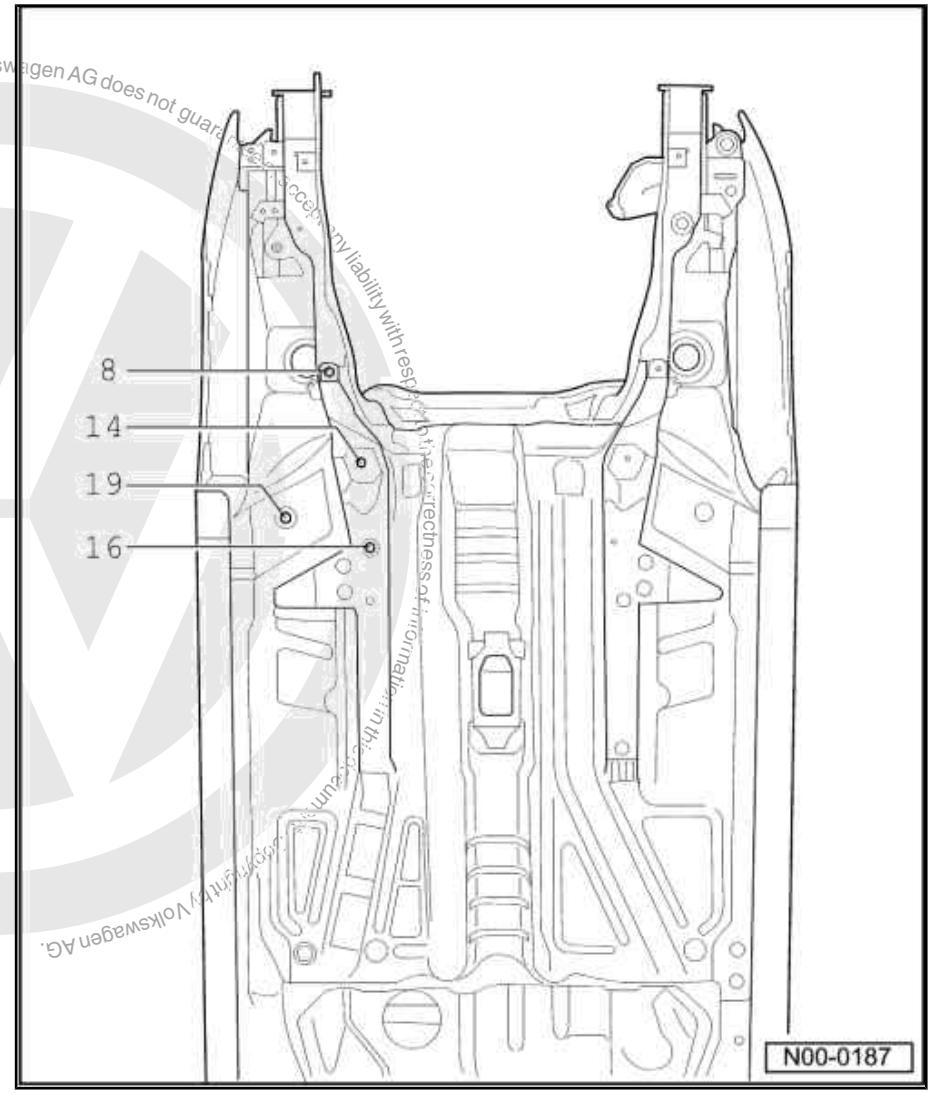

Protected by copyright. Copying for private or commercial purposes, in part or in whole, is not permitted unless authorised by Volkswagen AG. Volkswagen AG does not guarantee or accept any liability with respect to the correctness of information in this document. Copyright by Volkswagen AG.

satelettronica

Overview of central alignment brackets

8 - Subframe mounting

12 - Subframe mounting

14 - Distance piece, left and right identical

16 - Subframe mounting

19 - Front production mounting

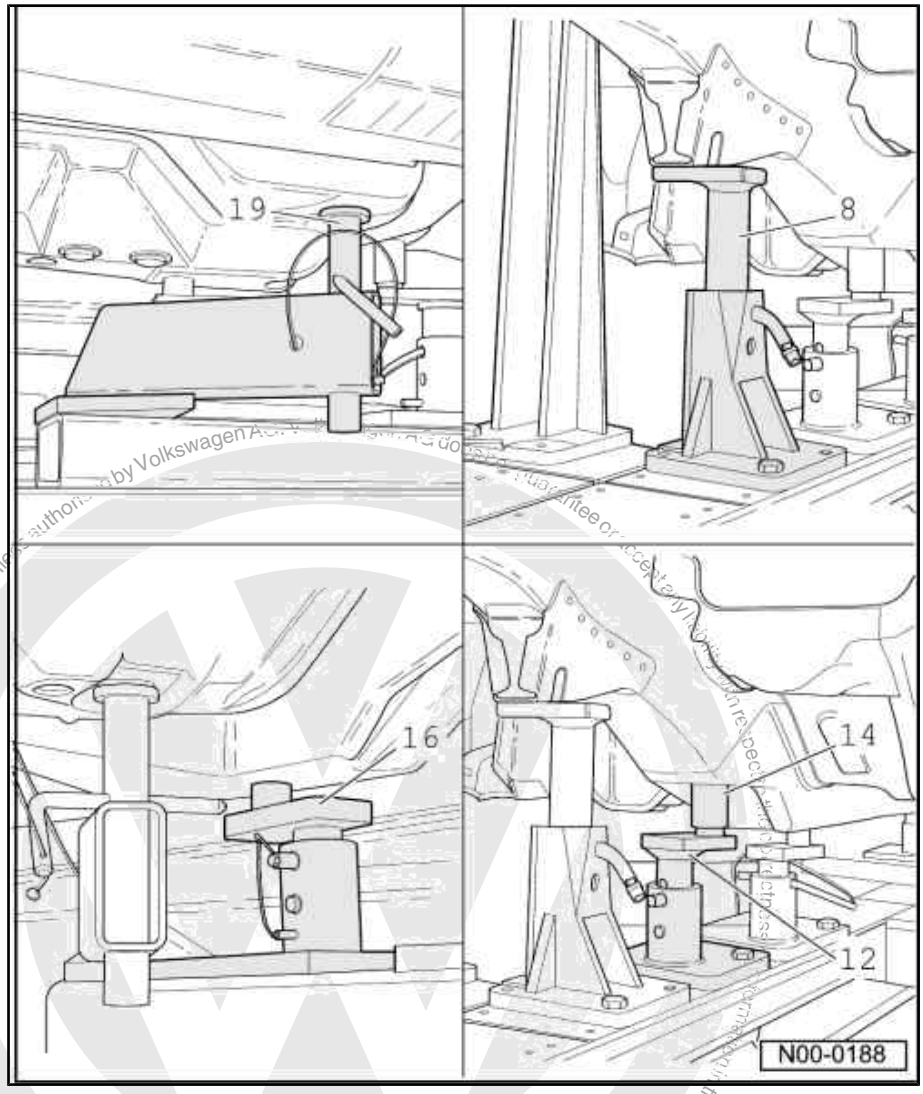

Protected by copyright. Copyright for private or commercial purposes, in part or in whole, is not permitted unless authorised by Volkswagen AG. Volkswagen AG does not guarantee or accept any liability with respect to the correctness and completeness of this document. Copyright by Volkswagen AG.

satelettronica

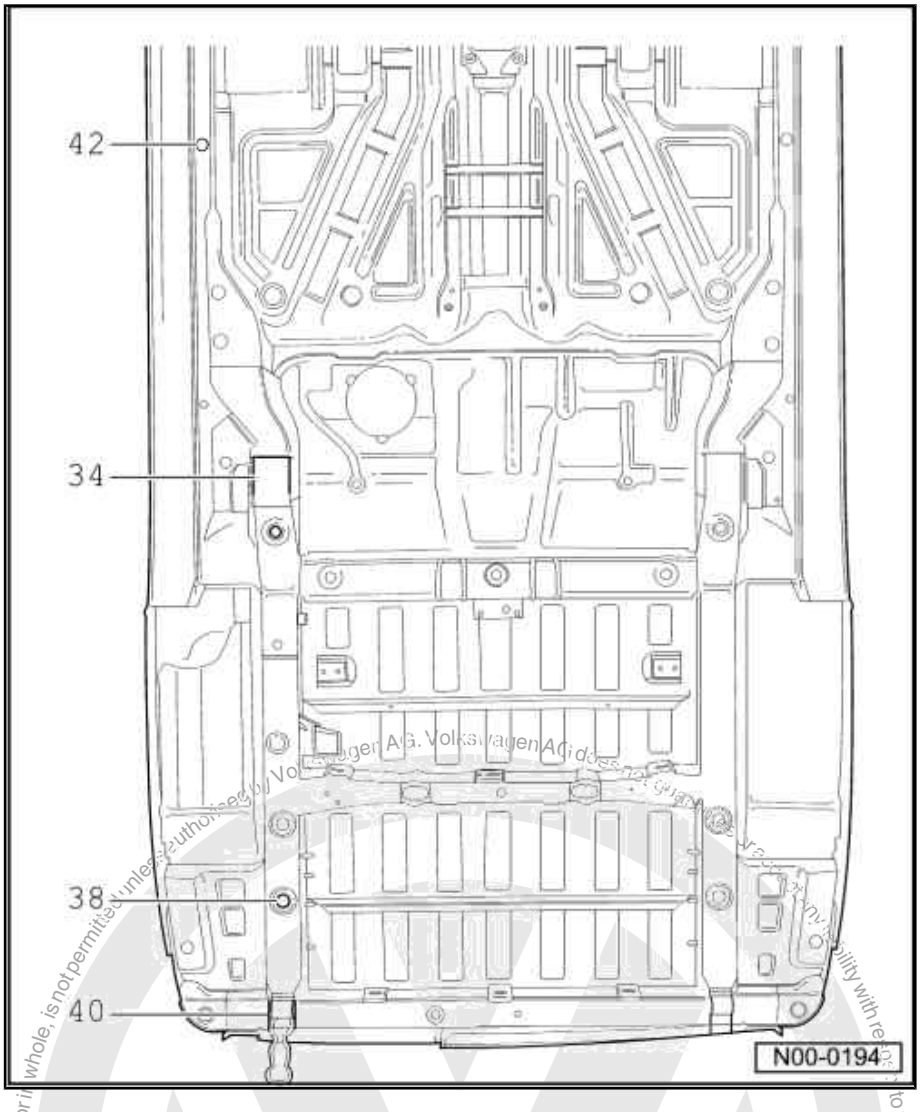

Overview - rear alignment bracket positions

Protected by copyright. Copying for private or commercial purposes, in part or in whole, is not permitted unless authorised by Volkswagen AG. Volkswagen AG does not guarantee or accept any liability with respect to the correctness of information in this document. Copyright by Volkswagen AG.

satelettronica

42 - Drilling in floor panel

34 - Front mounting for leaf spring

36 - Securing plate, left and right identical

38 - Drilling in longitudinal member

40 - Rear mounting for leaf spring

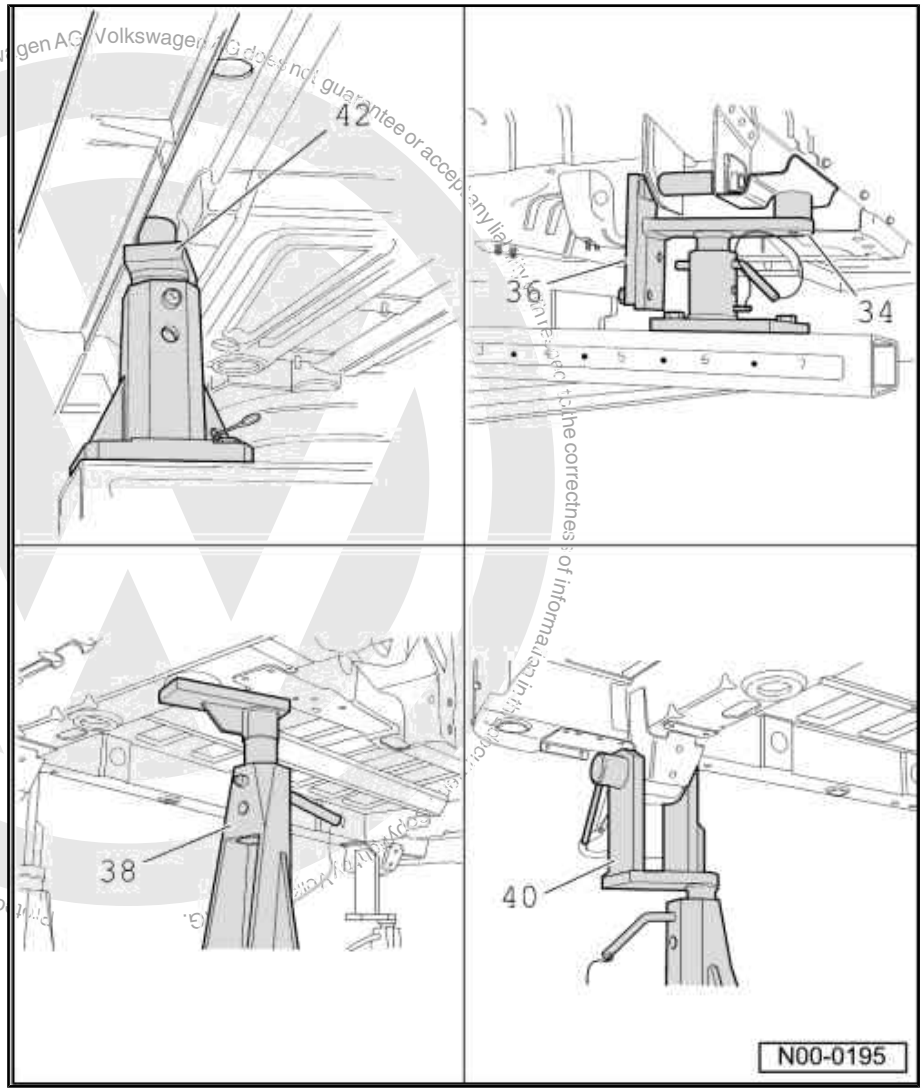

Protected by copyright. Copying for private or commercial purposes, in part or in whole, is not permitted unless authorised by Volkswagen AG. Volkswagen AG does not guarantee or accept any liability with respect to the correctness of information in this document. Copyright by Volkswagen AG.

satelettronica

5 Galvanized body parts

1 - One side galvanized

2 - Both sides galvanized

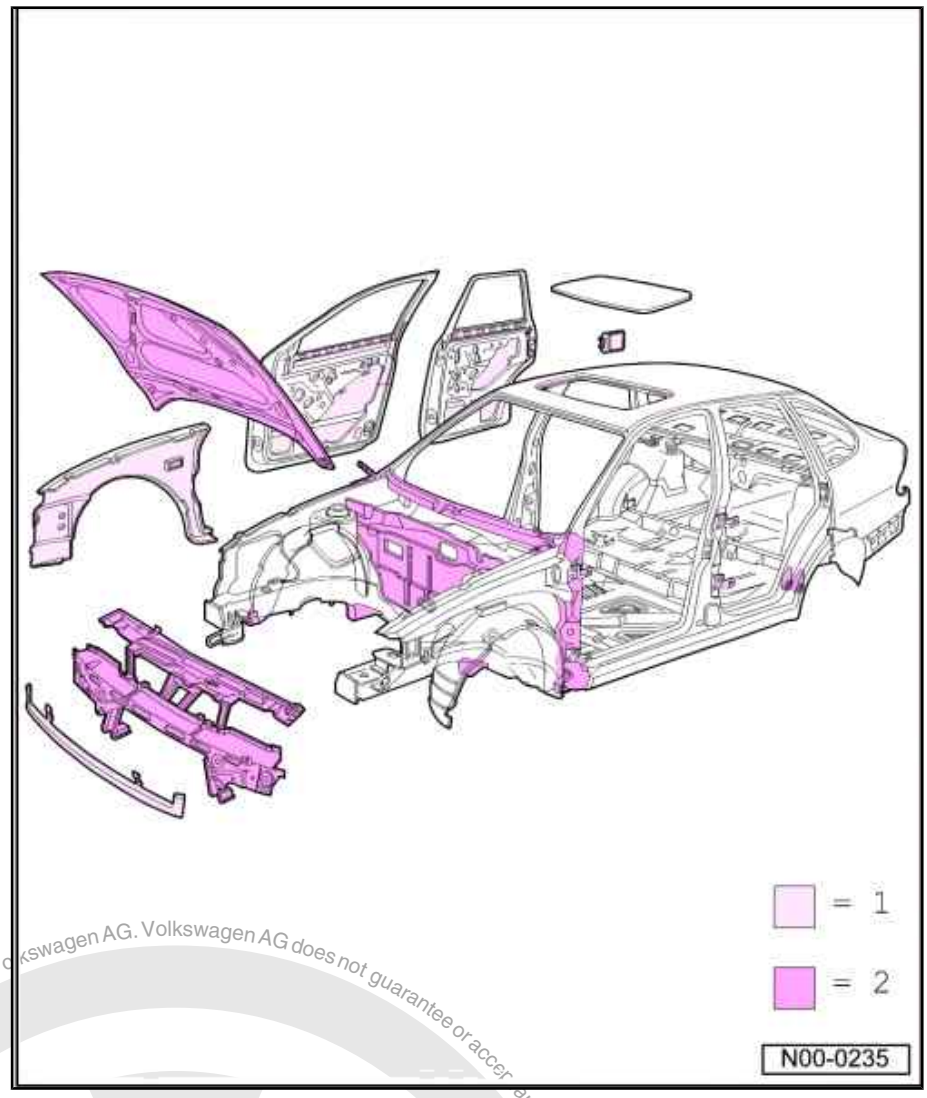

Protected by copyright. Copying for private or commercial purposes, in part or in whole, is not permitted unless authorised by Volkswagen AG. Volkswagen AG does not guarantee or accept any liability with respect to the correctness of information in this document. Copyright by Volkswagen AG.

satelettronica

50 – Body - front

RO: 50 43 55 50

1 Renewing wishbone support

Protected by copyright. Copyright by Volkswagen AG. Volkswagen AG does not guarantee or accept any liability with respect to the correctness of information in this document. Copyright by Volkswagen AG. Copying for private or commercial purposes, in part or in whole, is not permitted unless authorised by Volkswagen AG.

WARNING

Observe safety notes!

– ⇒ General Information; Body Repairs, General Body Repairs ; Chapter 1 - Safety notes

1.1 Removing

1.1.1 Cutting locations

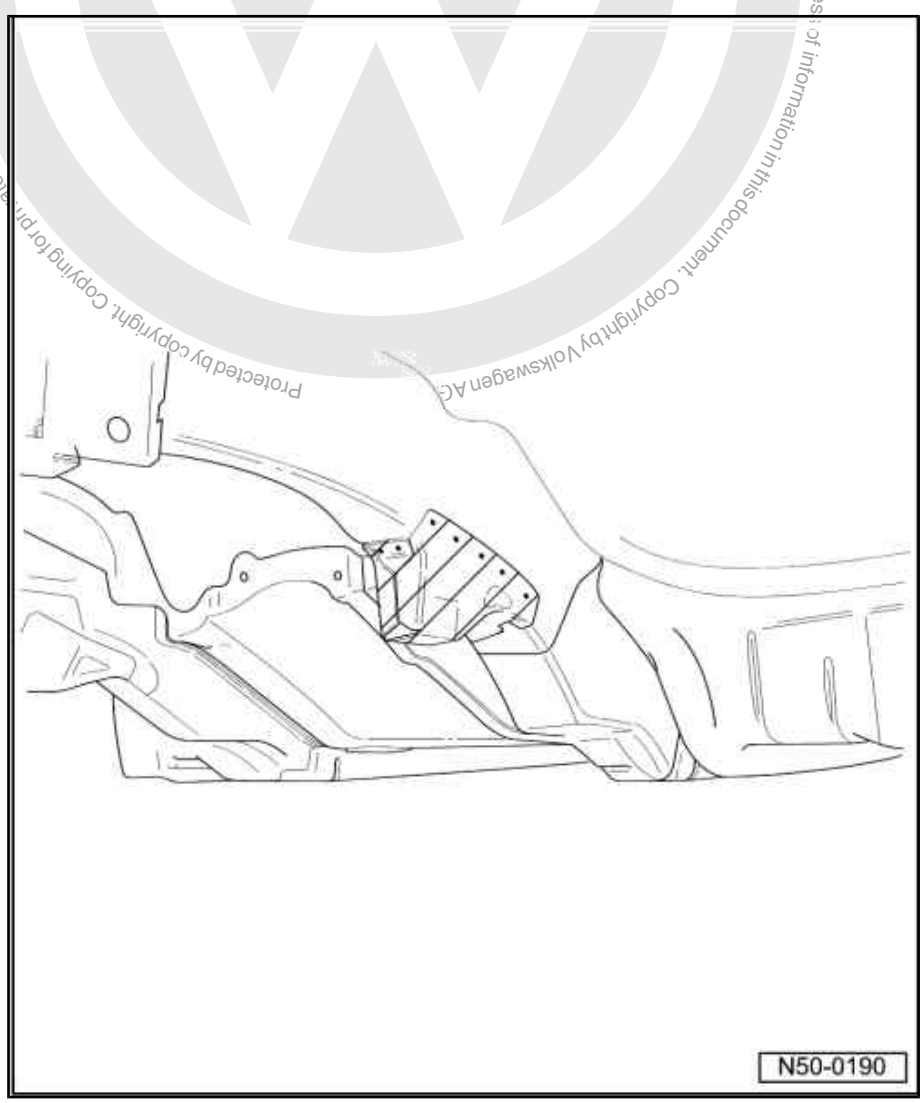

– Separate original joint.

satelettronica

1.1.2 Replacement part

♦ Bracket

– Preparing new part, drill 7 mm ∅ holes.

1.1.3 Welding in

– Secure wishbone support on alignment bracket.

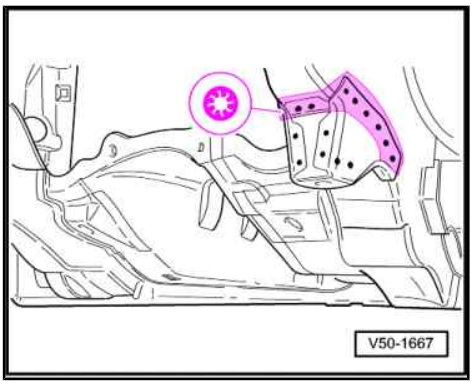

– Weld in support, SG plug weld seam.

– Additionally weld support, staggered SG continuous weld seam.

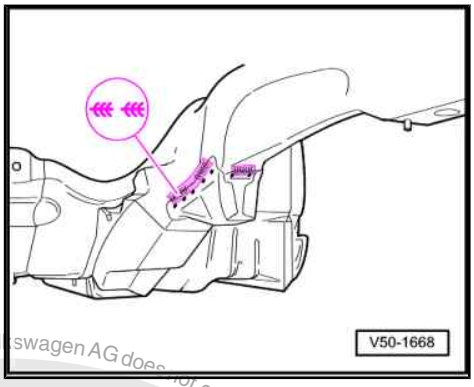

Protected by copyright. Copyright for private or commercial purposes, in part or in whole, is not permitted unless authorised by Volkswagen AG. Volkswagen AG does not guarantee or accept any liability with respect to the correctness of information in this document. Copyright by Volkswagen AG.
satelettronica

RO: 50 72 55 50

2 Renewing upper wheel housing longitudinal member

WARNING

Observe safety notes!

– ⇒ General Information; Body Repairs, General Body Repairs ; Chapter 1 - Safety notes

2.1 Removing

Note

If the extent of damage permits, a vertical parting cut can be made.

2.1.1 Cutting locations

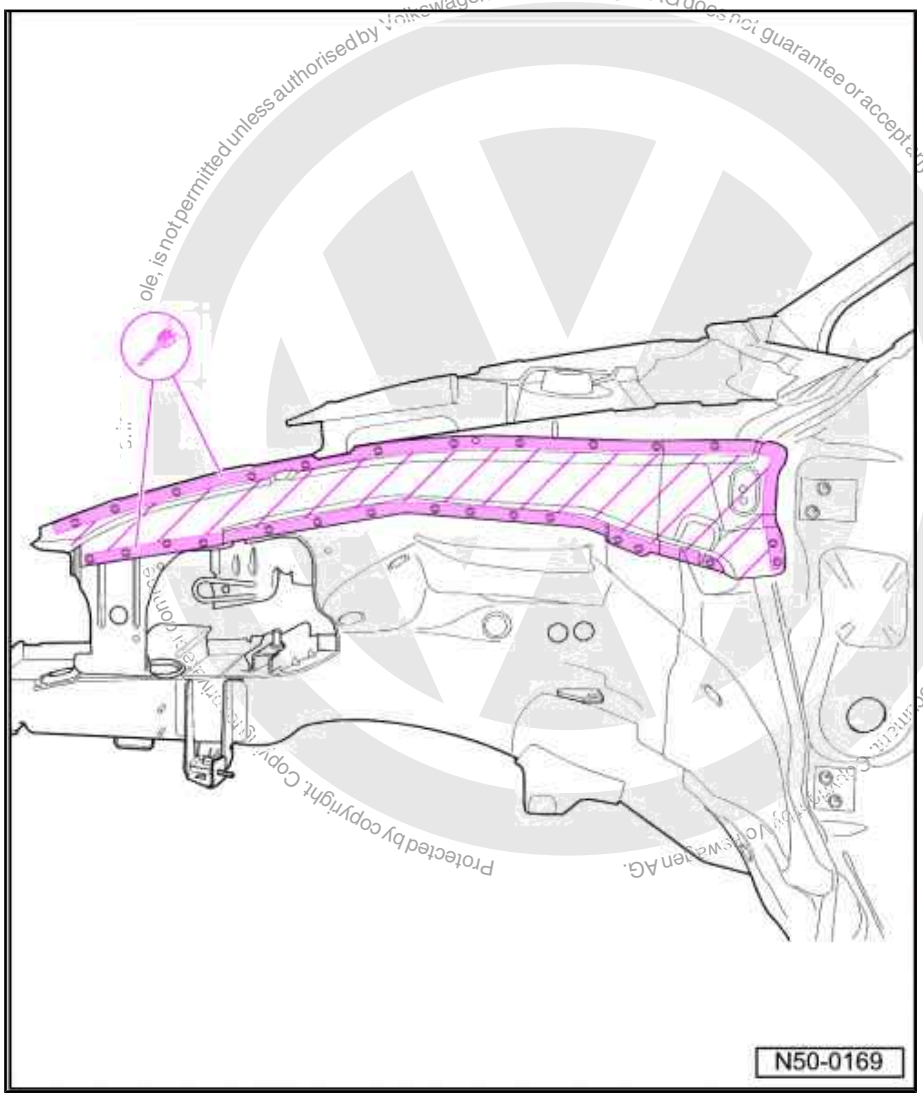

Protected by copyright. Copyright by Volkswagen AG.
Volkswagen AG. Volkswagen AG does not guarantee or accept any liability with respect to the correctness of information in this document. Copyright by Volkswagen AG.
satelettronica

Protected by copyright. Copying for private or commercial purposes, in part or in whole, is not permitted unless authorised by Volkswagen AG. Volkswagen AG does not guarantee or accept any liability with respect to the correctness of information in this document. Copyright by Volkswagen AG.

– Drill out spot welds.
– Cut out longitudinal member.
– Remove remaining material.

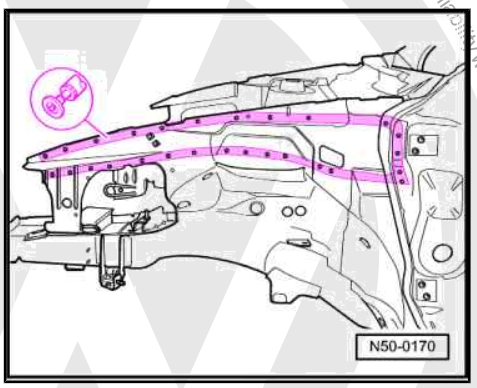

2.1.2 Replacement part

♦ Longitudinal member for wheel housing

Preparing new part

– Drill 7 mm ∅ holes for SG plug weld seam.

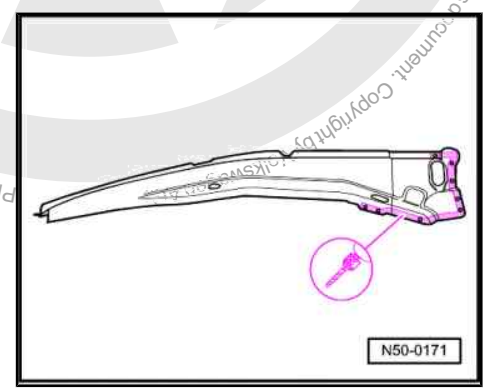

2.1.3 Welding in

– Spot weld upper wheel housing longitudinal member, RP spot weld seam.
– Weld remaining joint, SG plug weld seam.

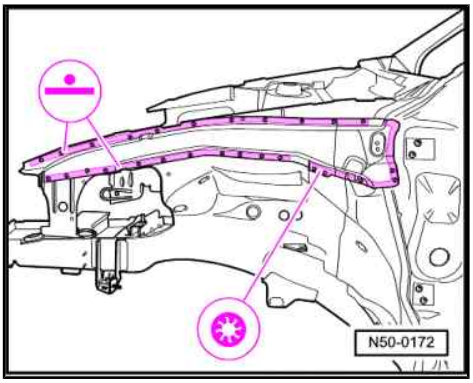

satelettronica

RO: 50 74 55 02

3 Renewing front wheel housing

WARNING

Observe safety notes!

– ⇒ General Information; Body Repairs, General Body Repairs ; Chapter 1 - Safety notes

3.1 Removing

Note

Renew upper wheel housing longitudinal member complete.

3.1.1 Cutting locations

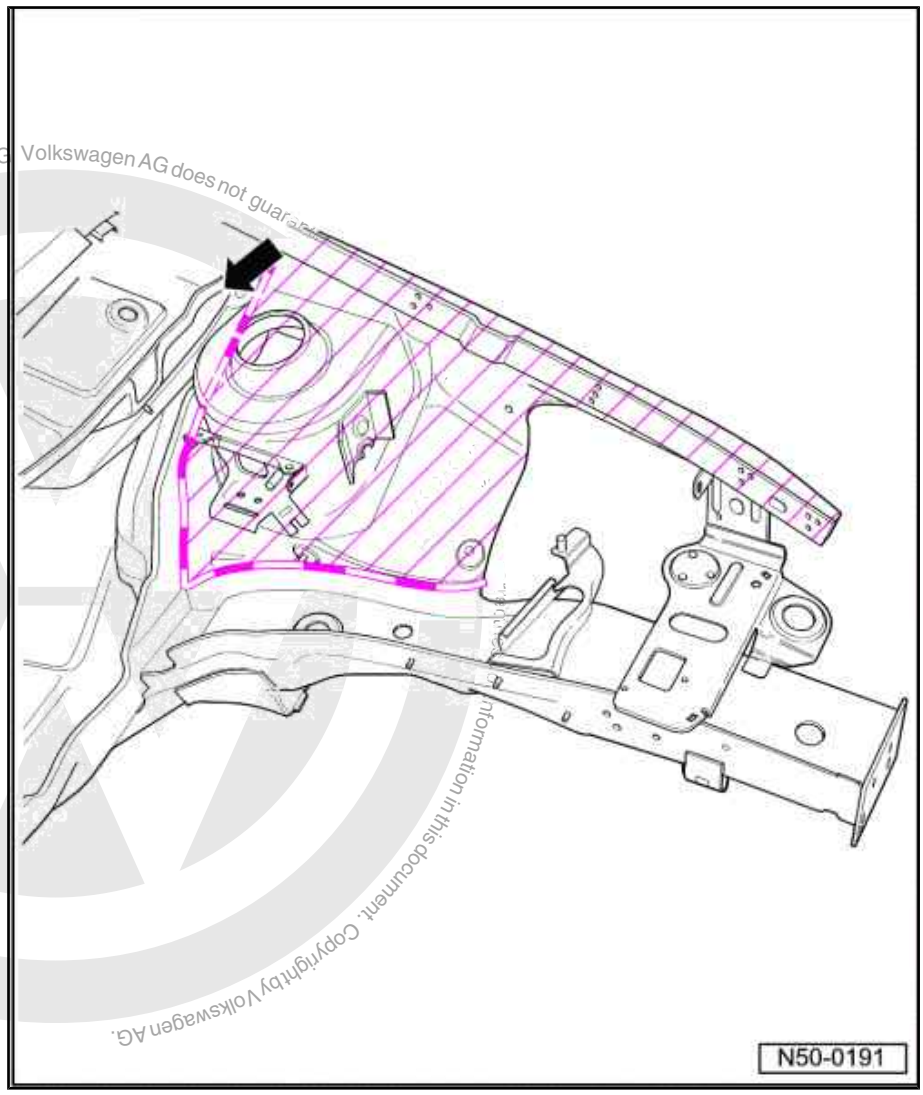

Protected by copyright. Copying for private or commercial purposes, in part or in whole, is not permitted unless authorised by Volkswagen AG. Volkswagen AG does not guarantee the accuracy of the information in this document. Copyright by Volkswagen AG.

satelettronica

Protected by copyright. Copying, distribution and availability to third parties is prohibited, unless authorised by Volkswagen AG. Volkswagen AG does not guarantee or accept any liability with respect to the correctness of information in this repair manual.

– Separate web plate -arrow- from suspension strut mounting and wheel housing.
– Bend web plate -arrow- towards windscreen.
– Cut wheel housing out behind suspension strut mounting.
– Remove remaining material.

3.1.2 Replacement parts

♦ Wheel housing
♦ Longitudinal member for wheel housing

Preparing new part

– Transfer parting cut to new part and cut out.

3.1.3 Welding in

– Fix subpart on alignment bracket.
– Adapt wing before welding in. When doing this, note width, length and diagonal dimensions.
– In parting zone, carry out offset overlap weld to both sides under 4-cornered opening -arrow-, staggered SG continuous weld seam.

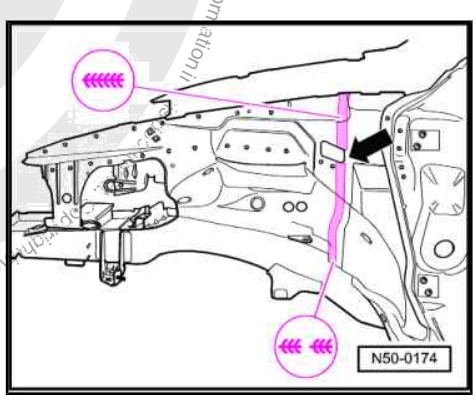

– In parting zone, carry out butt weld above 4-cornered opening, SG continuous weld seam.
– Spot weld wheel housing to lower longitudinal member, RP spot weld.

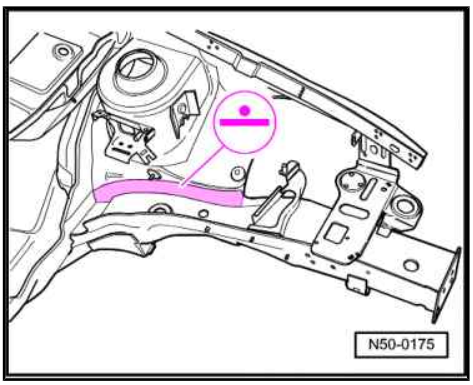

– Spot weld wheel housing to bumper bracket, RP spot weld seam.
– Bend back web plate -arrow- .
– Spot weld web plate -arrow- , RP spot weld.
– Weld in longitudinal member for wheel housing ⇒ page 29 .

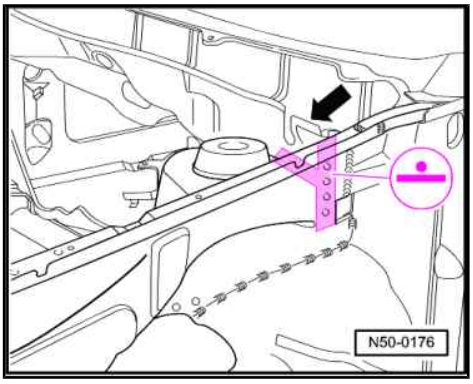

satelettronica

RO: 50 75 55 02

4 Renewing front wheel housing - partial renewal

WARNING

Observe safety notes!

– ⇒ General Information; Body Repairs, General Body Repairs ; Chapter 1 - Safety notes

4.1 Removing

4.1.1 Cutting locations

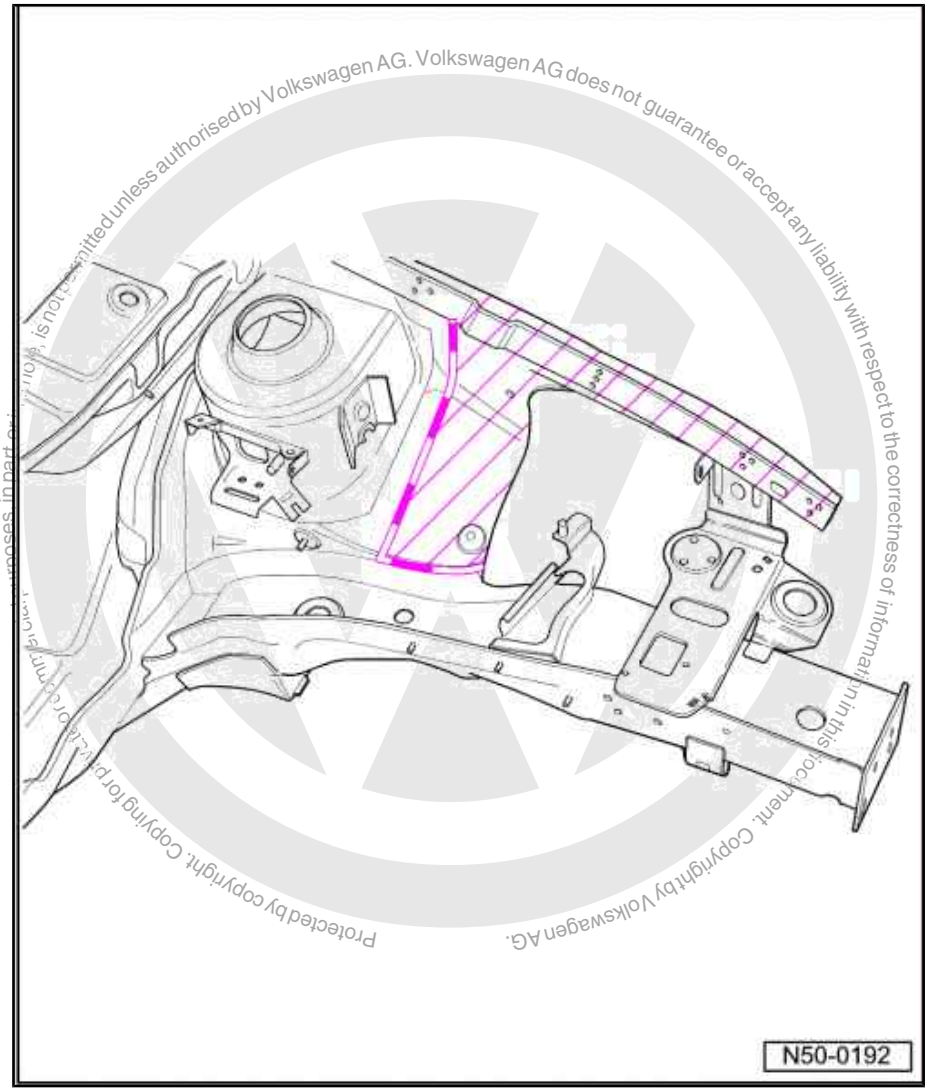

Protected by copyright. Copyright by Volkswagen AG.
Copyright by Volkswagen AG. Volkswagen AG does not guarantee or accept any liability with respect to the correctness of information in this document.
Copying for private or commercial purposes, in part or in whole, is not permitted unless authorised by Volkswagen AG.
satelettronica

– Cut out wheel housing in front of suspension strut mounting.
– Remove remaining material.

– Cut out upper wheel housing longitudinal member as required (50 mm offset to wheel housing parting cut).

4.1.2 Replacement parts

- Wheel housing
- Longitudinal member for wheel housing

Preparing new part

– Transfer parting cut to new part and cut out.

4.1.3 Welding in

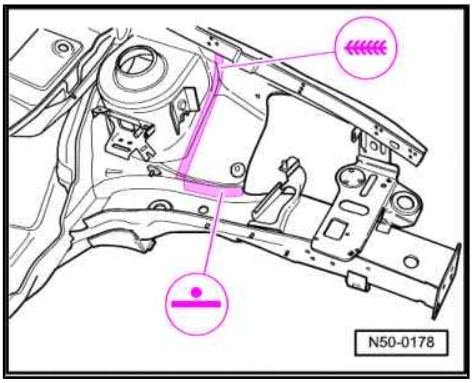

– Fix subpart on alignment bracket.

– Adapt wing before welding in. When doing this, note width, length and diagonal dimensions.

– Butt weld parting zone, SG continuous weld seam.

– Weld in wheel housing at longitudinal member, RP spot weld seam.

– Weld in longitudinal member for wheel housing ➪ page 29 .

Protected by copyright. Copying for private or commercial purposes, in part or in whole, is not permitted unless authorised by Volkswagen AG. Volkswagen AG does not guarantee or accept any liability with respect to the correctness of information in this document. Copyright by Volkswagen AG.

satelettronica

RO: 50 79 55 50

5 Renewing front longitudinal member

WARNING

Observe safety notes!

– ⇒ General Information; Body Repairs, General Body Repairs ; Chapter 1 - Safety notes

5.1 Removing

5.1.1 Cutting locations

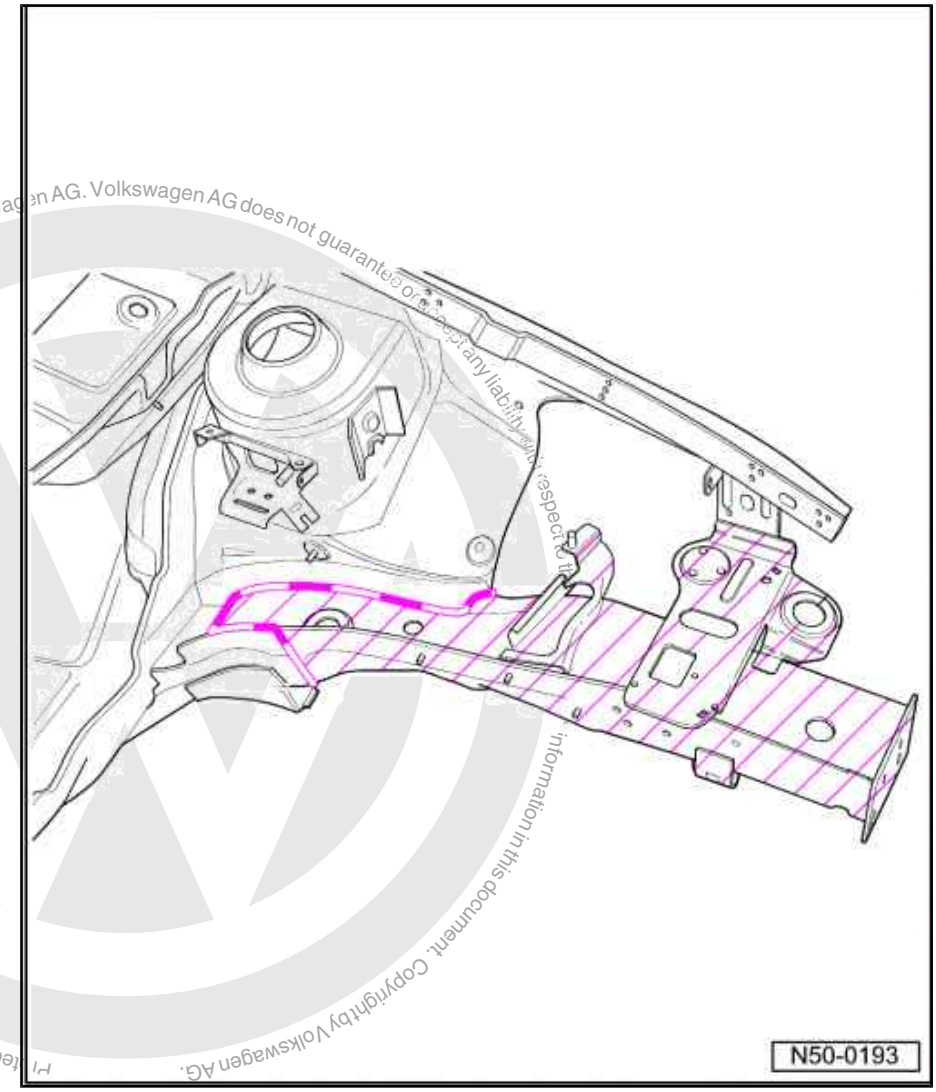

Protected by copyright. Copying for private or commercial purposes, in part or in whole, is not permitted unless authorised by Volkswagen AG. Volkswagen AG does not guarantee or accept any liability with respect to the information in this document. Copyright by Volkswagen AG.

satelettronica

– Locate parting cuts for subframe mounting.
– Separate longitudinal member cover plate at hole above subframe mounting.
– Cut out longitudinal member.

– Remove remaining material.

5.1.2 Replacement part

♦ Longitudinal member with reinforcing and captive nuts

Preparing new part

– Transfer parting cut to new part and cut out.

5.1.3 Welding in

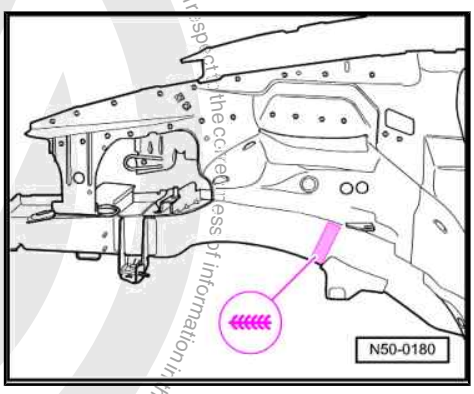

– Secure longitudinal member to alignment bracket and butt weld, SG continuous weld seam.

– Butt weld cutting point of cover plate, SG continuous weld seam.

– Weld in longitudinal member to wheel housing, RP spot weld seam.

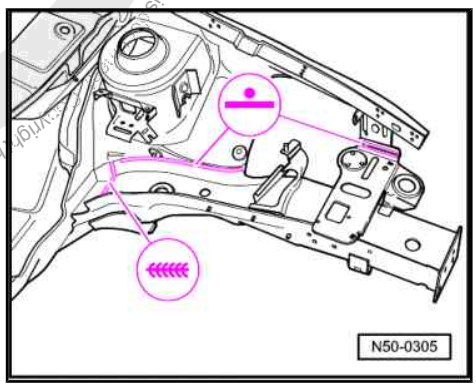

Protected by copyright. Copying for private or commercial purposes, in part or in whole, is not permitted unless authorised by Volkswagen AG. Volkswagen AG does not guarantee or accept any liability with respect to the correctness of information in this document.
satelettronica

RO: 50 79 55 52

6 Renewing front longitudinal member

WARNING

Observe safety notes!

– ⇒ General Information; Body Repairs, General Body Repairs ; Chapter 1 - Safety notes

6.1 Removing

6.1.1 Cutting locations

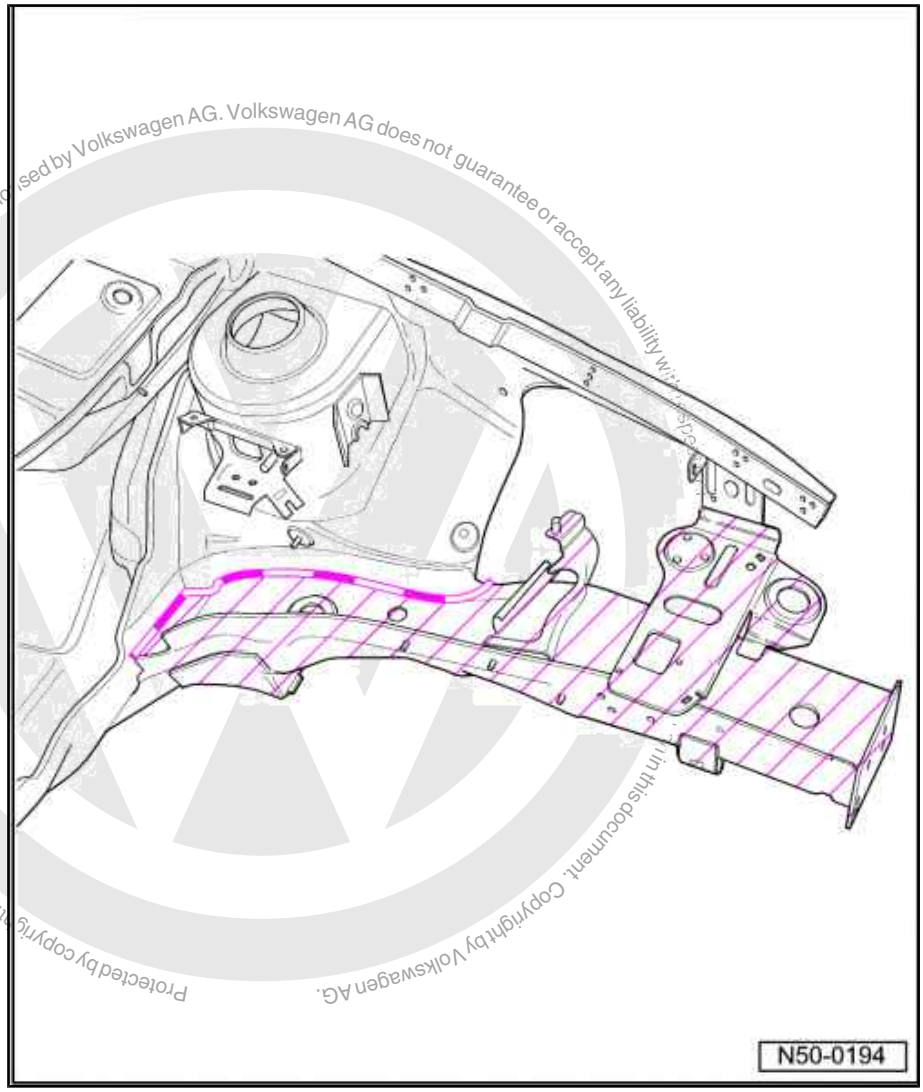

Protected by copyright. Copying for private or commercial purposes, in part or in whole, is not permitted unless authorised by Volkswagen AG. Volkswagen AG does not guarantee or accept any liability with respect to this document. Copyright by Volkswagen AG.

satelettronica

– Locate parting cuts behind subframe mounting.
– Separate original joint of longitudinal member cover plate.
– Cut out longitudinal member.
– Remove remaining material.

6.1.2 Replacement part

- Longitudinal member with reinforcing and captive nuts

Preparing new part

– Transfer parting cut to new part and cut out.

6.1.3 Welding in

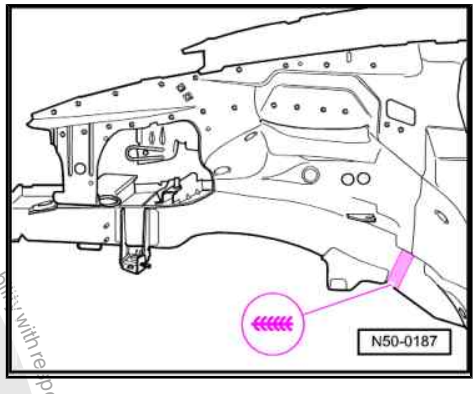

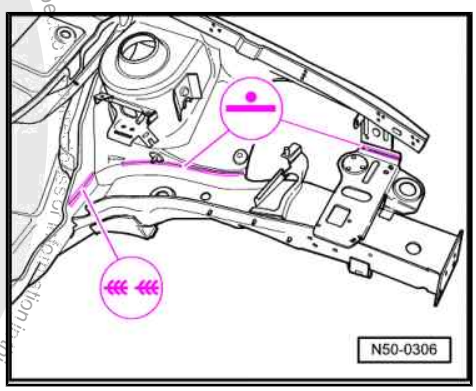

– Secure longitudinal member to alignment bracket and butt weld, SG continuous weld seam.

– Weld in longitudinal member to wheel housing, RP spot weld seam.

– Weld longitudinal member cover plate to bulkhead, staggered SG continuous weld seam.

Protected by copyright. Copying for private or commercial purposes, in part or in whole, is not permitted unless authorised by Volkswagen AG. Volkswagen AG does not guarantee or accept any liability with respect to the correctness of information in this document. Copyright by Volkswagen AG.
satelettronica

51 – Body - centre

RO: 51 03 55 00

1 Renewing roof

WARNING

Observe safety notes!

– ⇒ General Information; Body Repairs; General Body Repairs ; Chapter 1 - Safety notes

1.1 Removing

1.1.1 Cutting locations

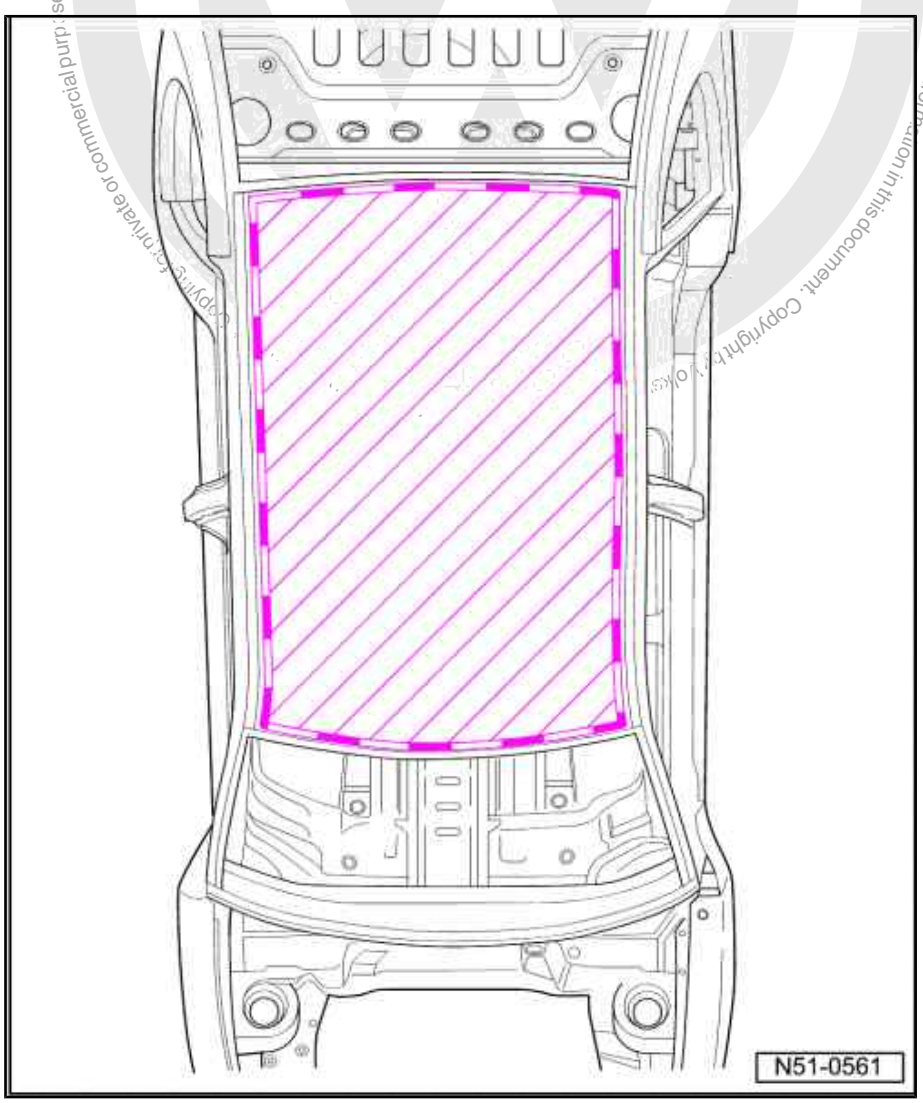

– Cut out roof.

– Remove remaining material.

Copyright by VW. Copying for private or commercial purposes, in part or in whole, is not permitted unless authorised by Volkswagen AG. Volkswagen AG does not guarantee or accept any liability with respect to the correctness of information in this document.
satelettronica

1.1.2 Replacement parts

- Roof
- Vehicles with sunroof = one roof reinforcement.
- Vehicles with no sunroof = three roof reinforcements.
- Butyl adhesive sealing cord AKL 450 005 05

1.1.3 Welding in

– Weld in roof reinforcement, RP spot weld seam.

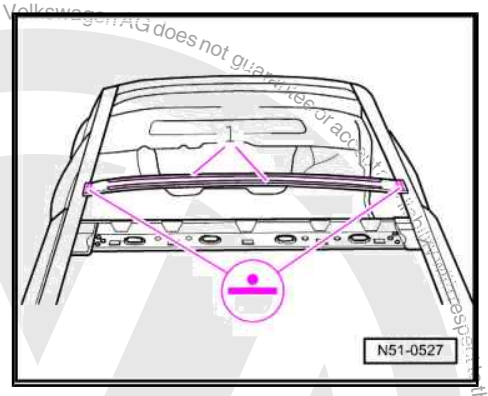

– Apply butyl adhesive sealing cord -1- to roof reinforcement.
– Weld in roof, RP spot weld seam.

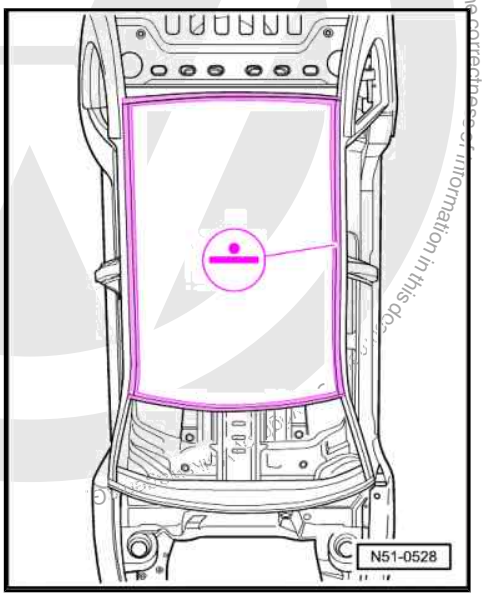

Protected by copyright. Copying for private or commercial purposes, in part or in whole, is not permitted unless authorised by Volkswagen AG. Volkswagen AG does not guarantee or accept any liability with respect to the correctness of information in this document.
satelettronica

RO: 51 03 55 10

2 Renewing roof (estate)

WARNING

Observe safety notes!

– ⇒ General Information; Body Repairs, General Body Repairs ; Chapter 1 - Safety notes

2.1 Removing

2.1.1 Cutting locations

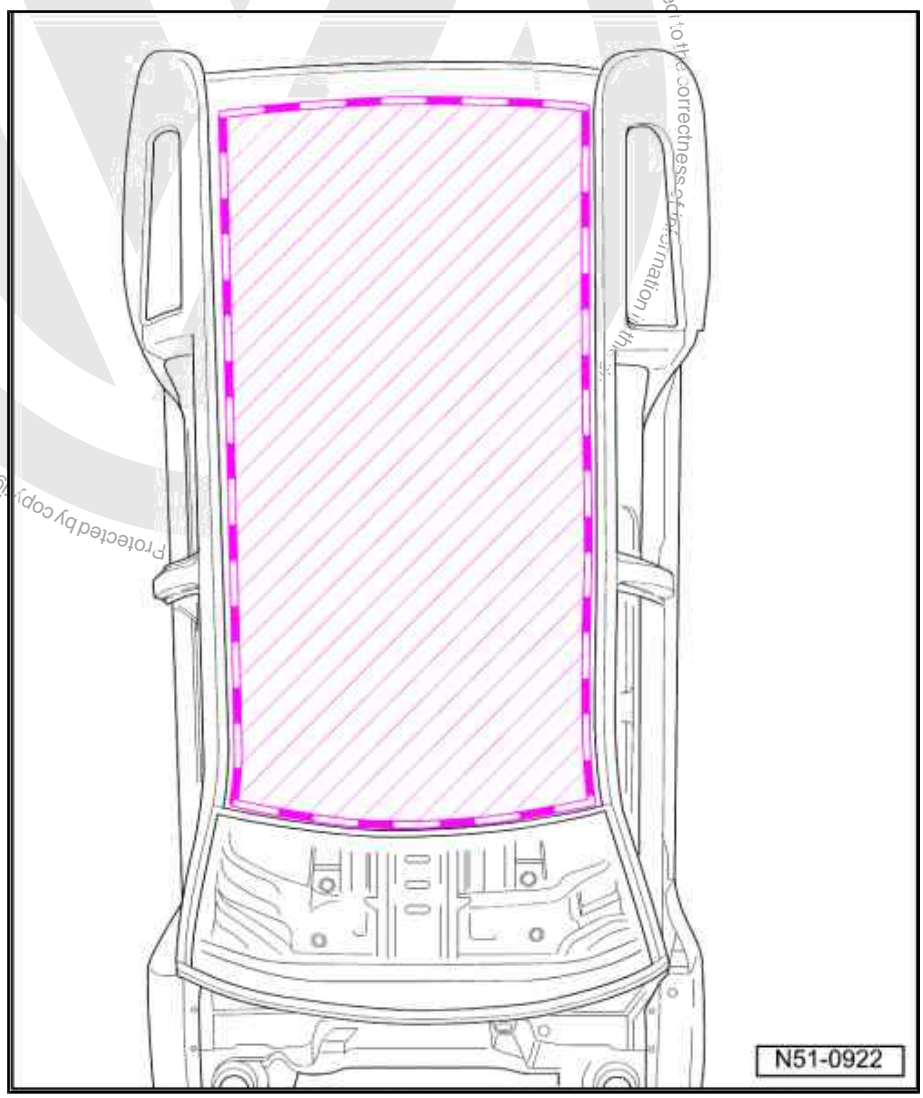

– Cut out roof.
– Remove remaining material.

Protected by copyright. Copying for private or commercial purposes, in part or in whole, is not permitted unless authorised by Volkswagen AG. Volkswagen AG does not guarantee or accept any liability with respect to the correctness of information.
satelettronica

2.1.2 Replacement parts

- Roof
- Vehicles with sunroof = three roof reinforcements.
- Vehicles with no sunroof = five roof reinforcements.
- Vehicles with roof railing = ten mountings.
- Butyl adhesive sealing cord AKL 450 005 05

2.1.3 Welding in

– Adapt roof reinforcing to fit and secure in position.

– Weld in roof reinforcing, RP spot weld seam.

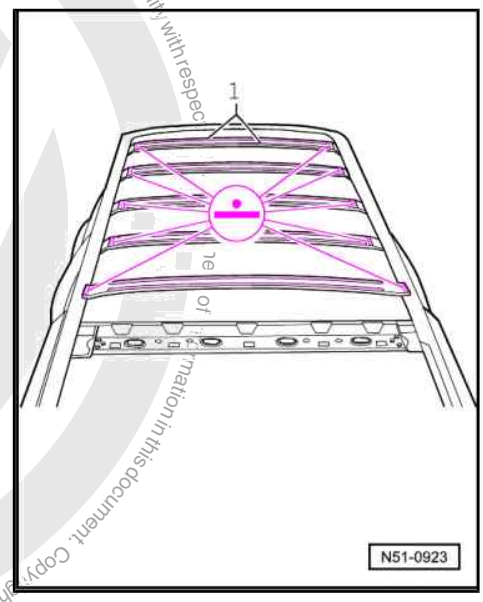

– Apply butyl adhesive sealing cord -1- to all roof reinforcements.

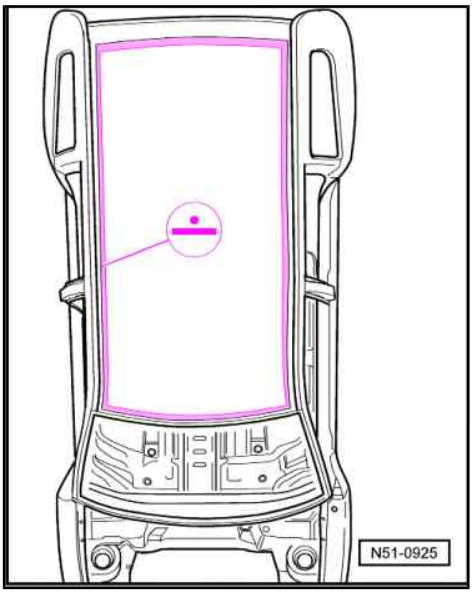

Protected by copyright. Copying for private or commercial purposes, in part or whole, is not permitted unless authorised by Volkswagen AG. Volkswagen AG does not guarantee or accept any liability with respect to the correctness of information in this document. Copyright by Volkswagen AG.
satelettronica

– Weld in roof, RP spot weld seam.
– Secure mountings according to given measurements and tack weld
♦ Dimension a = 125 mm
♦ Dimension b = 425 mm
♦ Dimension c = 290 mm
♦ Dimension d = 325 mm
♦ Dimension e = 398 mm
– Check seating of mountings with roof railing installed.
– Weld in mountings SG plug weld seam.

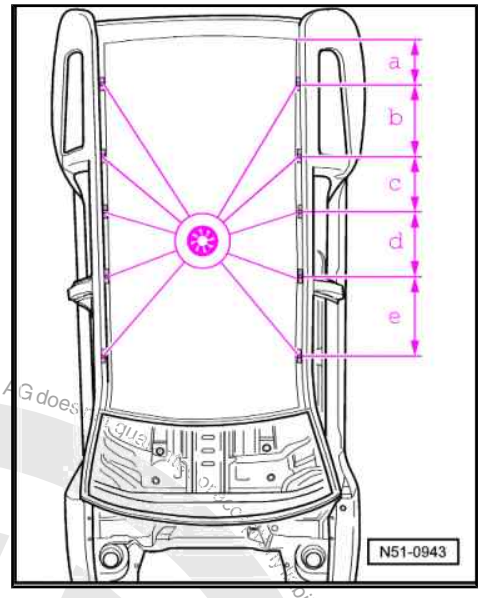

2.2 Renewing T-pins for roof moulding

2.2.1 T-pin position measurements

1 - 25 mm
2 - 140 mm
3 - 180 mm
4 - 180 mm
5 - 180 mm
6 - 180 mm
7 - 180 mm
8 - 155 mm
9 - 255 mm
10 - 185 mm
11 - 175 mm
12 - 115 mm
13 - 125 mm
14 - 270 mm
15 - 215 mm

All measurements with no de-

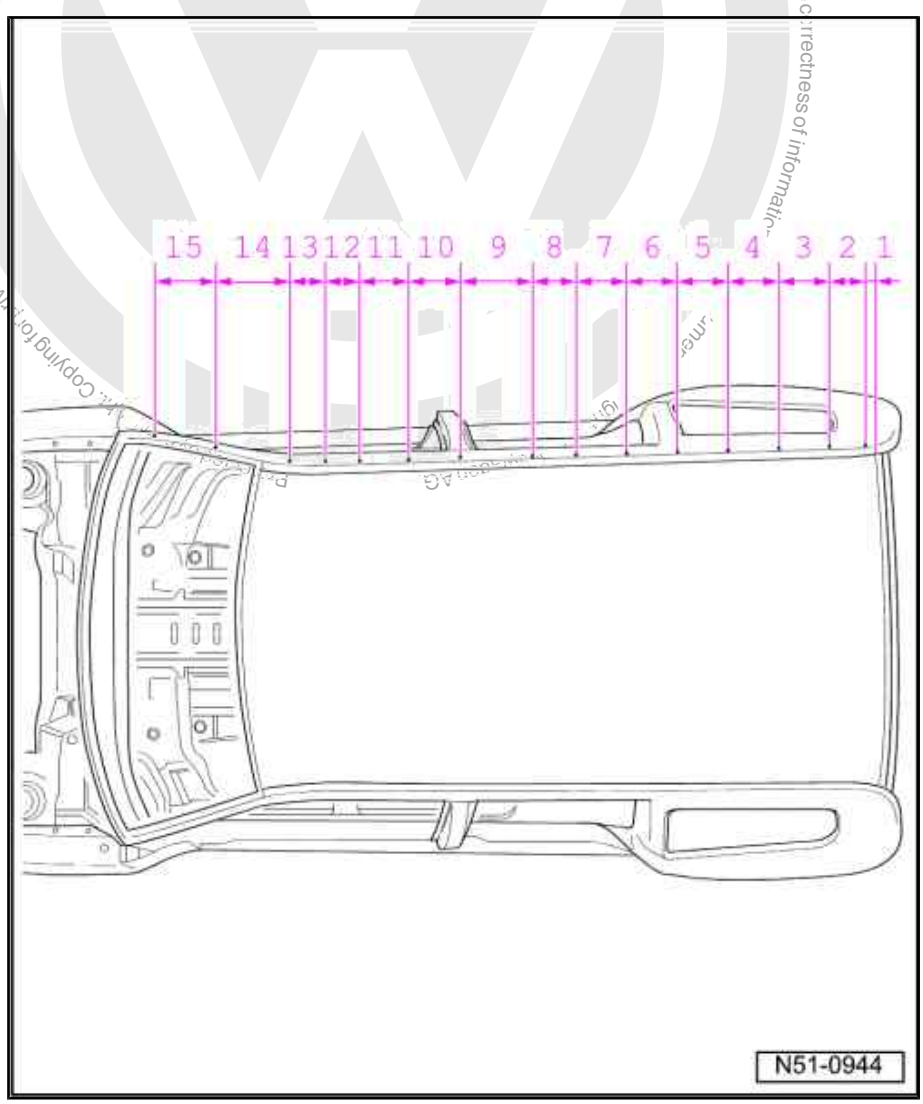

satelettronica

tails of tolerances.

Replacement part

- ♦ T-pin N 014 032 3
- – Weld in T-pins using dent remover -V.A.G 1713- or -V.A.G 1514 A- .

Protected by copyright. Copying for private or commercial purposes, in part or in whole, is not permitted unless authorised by Volkswagen AG. Volkswagen AG does not guarantee or accept any liability with respect to the correctness of information in this document. Copyright by Volkswagen AG.

satelettronica

RO: 51 07 55 50

3 Renewing front roof cross member

WARNING

Observe safety notes!

– ⇒ General Information; Body Repairs, General Body Repairs ; Chapter 1 - Safety notes

3.1 Removing

3.1.1 Cutting locations

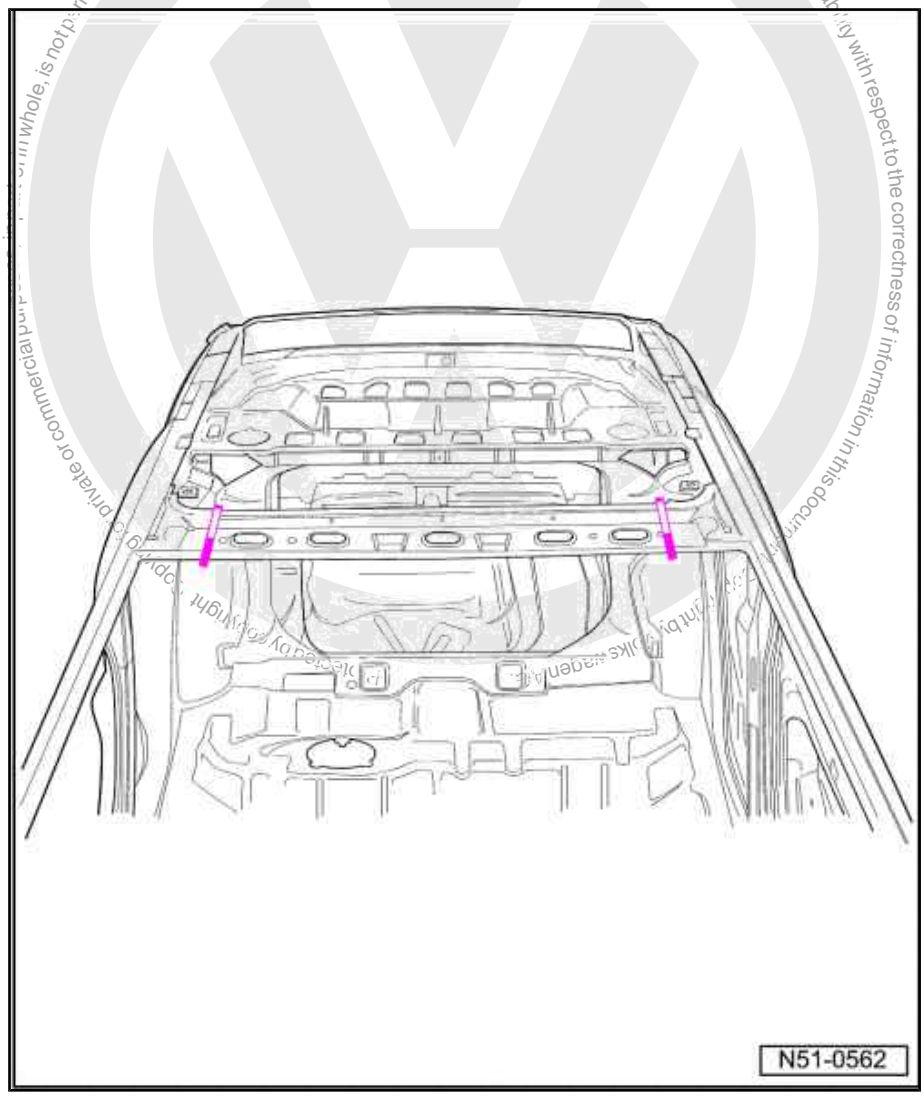

– Cut out cross member.
– Remove remaining material.

satelettronica

3.1.2 Replacement part

- Front roof cross member

3.1.3 Welding in

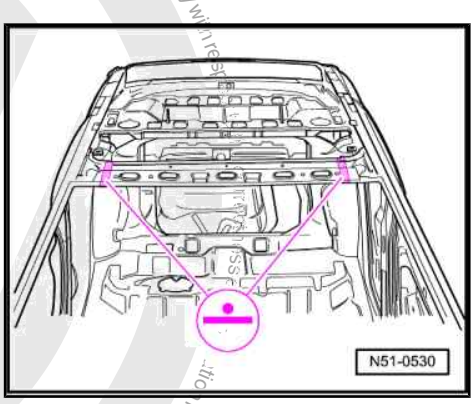

– Adapt new part to fit and hold in position.
– Weld new part in, RP spot weld seam.
– Welding in roof ⇒ page 39 .
– Welding in roof (estate) ⇒ page 41 .

Protected by copyright. Copying for private or commercial purposes, in part or in whole, is not permitted unless authorised by Volkswagen AG. Volkswagen AG does not guarantee or accept any liability with respect to the correctness of information in this document. Copyright by Volkswagen AG.
satelettronica

RO: 51 09 55 50

4 Renewing rear roof cross member

WARNING

Observe safety notes!

– ⇒ General Information; Body Repairs, General Body Repairs ; Chapter 1 - Safety notes

4.1 Removing

4.1.1 Cutting locations

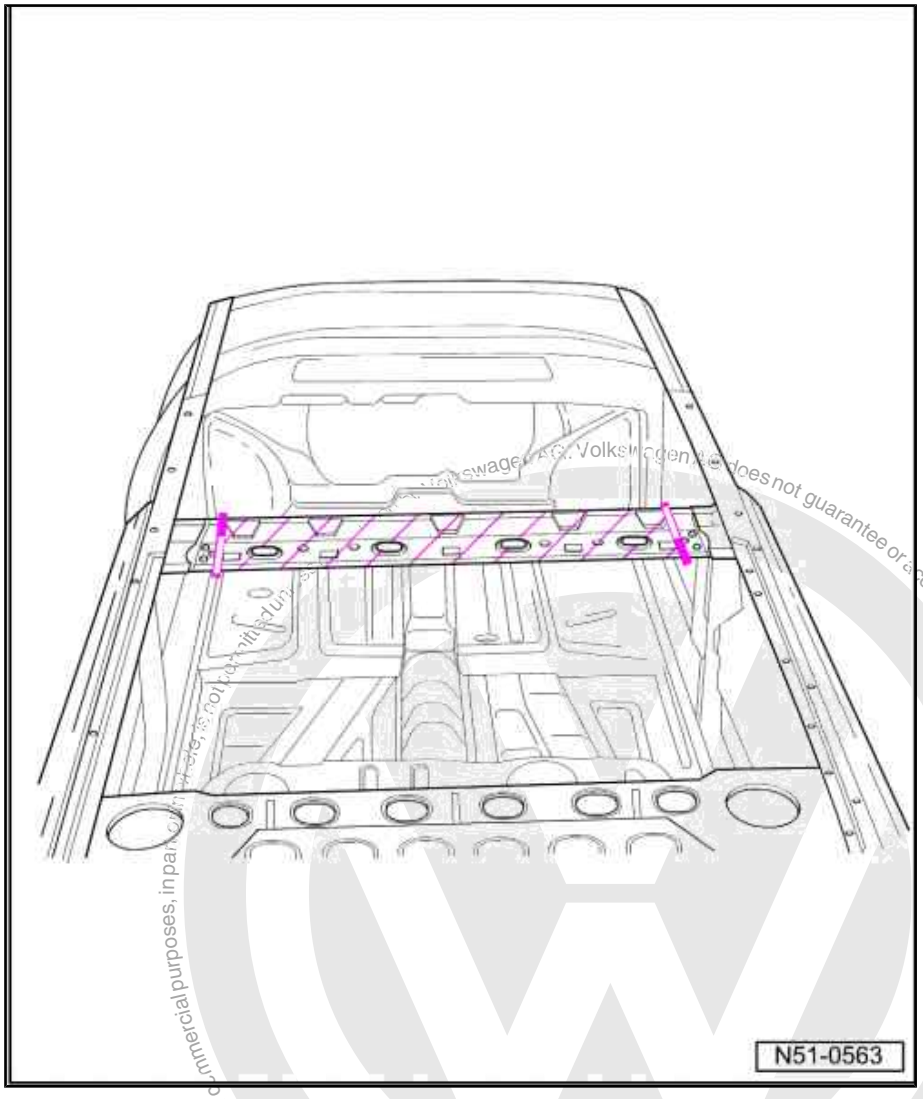

– Cut out cross member.
– Remove remaining material.

Protected by copyright. Copying for private or commercial purposes, in part or in whole, is not permitted unless authorised by Volkswagen AG. Volkswagen AG does not guarantee or accept any liability with respect to the correctness of information in this document. Copyright by Volkswagen AG.
satelettronica

4.1.2 Replacement part

- Rear roof cross member

4.1.3 Welding in

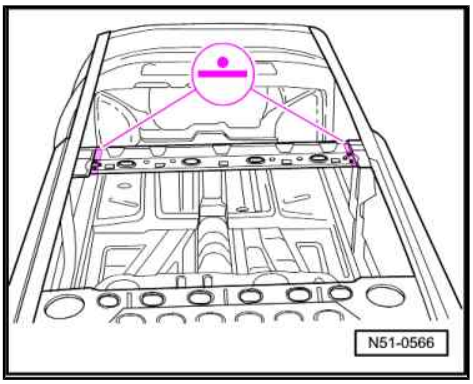

– Adapt new part to fit and hold in position.
– Weld new part in, RP spot weld seam.
– Welding in roof ⇒ page 39 .

Protected by copyright. Copying for private or commercial purposes, in part or in whole, is not permitted unless authorised by Volkswagen AG. Volkswagen AG does not guarantee or accept any liability with respect to the correctness of information in this document. Copyright by Volkswagen AG.

satelettronica

RO: 51 09 55 60

5 Renewing rear roof cross member (estate)

WARNING

Observe safety notes!

– ⇒ General Information; Body Repairs, General Body Repairs ; Chapter 1 - Safety notes

5.1 Removing

5.1.1 Cutting locations

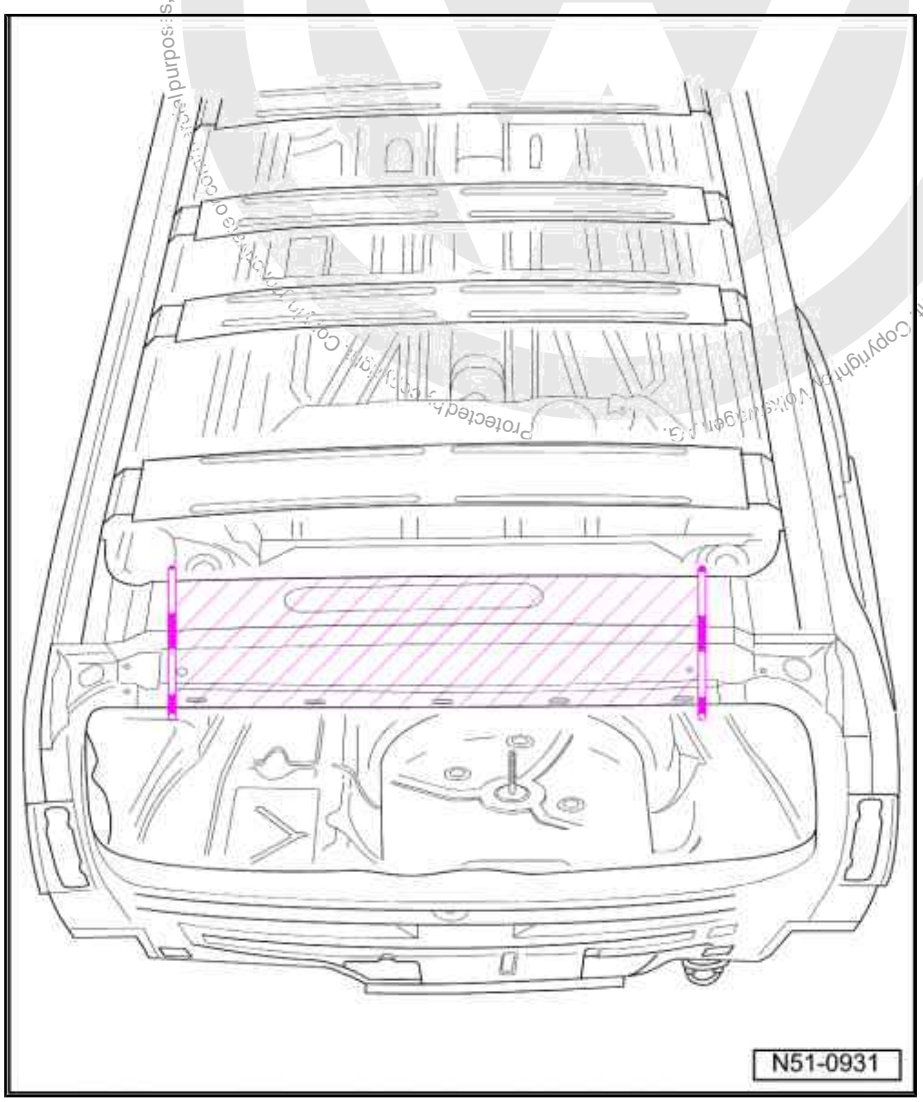

– Cut out cross member.

– Remove remaining material.

Copyright by Volkswagen AG. Volkswagen AG does not guarantee or accept any liability with respect to the correctness of information in this document. Copyright by Volkswagen AG. Protected by copyright. Copying for private or commercial purposes, in part or in whole, is not permitted unless authorised by Volkswagen AG.
satelettronica

5.1.2 Replacement part

- Rear roof cross member
- Butyl adhesive sealing cord AKL 450 005 05

Preparing new part

– Make holes in outer joint surface of new part.

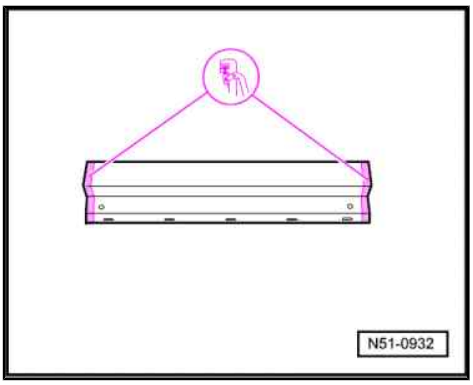

5.1.3 Welding in

– Adapt new part to fit and hold in position.
– Weld new part in, SG plug weld seam.
– Adapt rear roof cross member.
– Apply butyl adhesive sealing cord -1- to roof reinforcement.
– Welding in roof ⇒ page 41 .

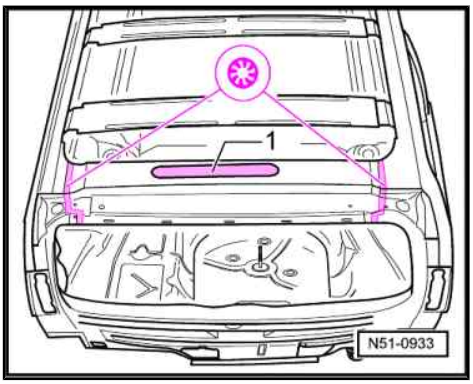

Protected by copyright. Copying for private or commercial purposes, in part or in whole, is not permitted unless authorised by Volkswagen AG. Volkswagen AG does not guarantee or accept any liability with respect to the correctness of information in this document. Copyright by Volkswagen AG.
satelettronica

Protected by copyright. Copying for private or commercial purposes, in part or in whole, is not permitted unless authorised by Volkswagen AG. Volkswagen AG does not guarantee or accept any liability with respect to the correctness of information in this document. Copyright by Volkswagen AG.

RO: 51 27 55 02

6 Renewing outer side panel - partial renewal

WARNING

Observe safety notes!

– ⇒ General Information; Body Repairs, General Body Repairs ; Chapter 1 - Safety notes

6.1 Removing

6.1.1 Cutting locations

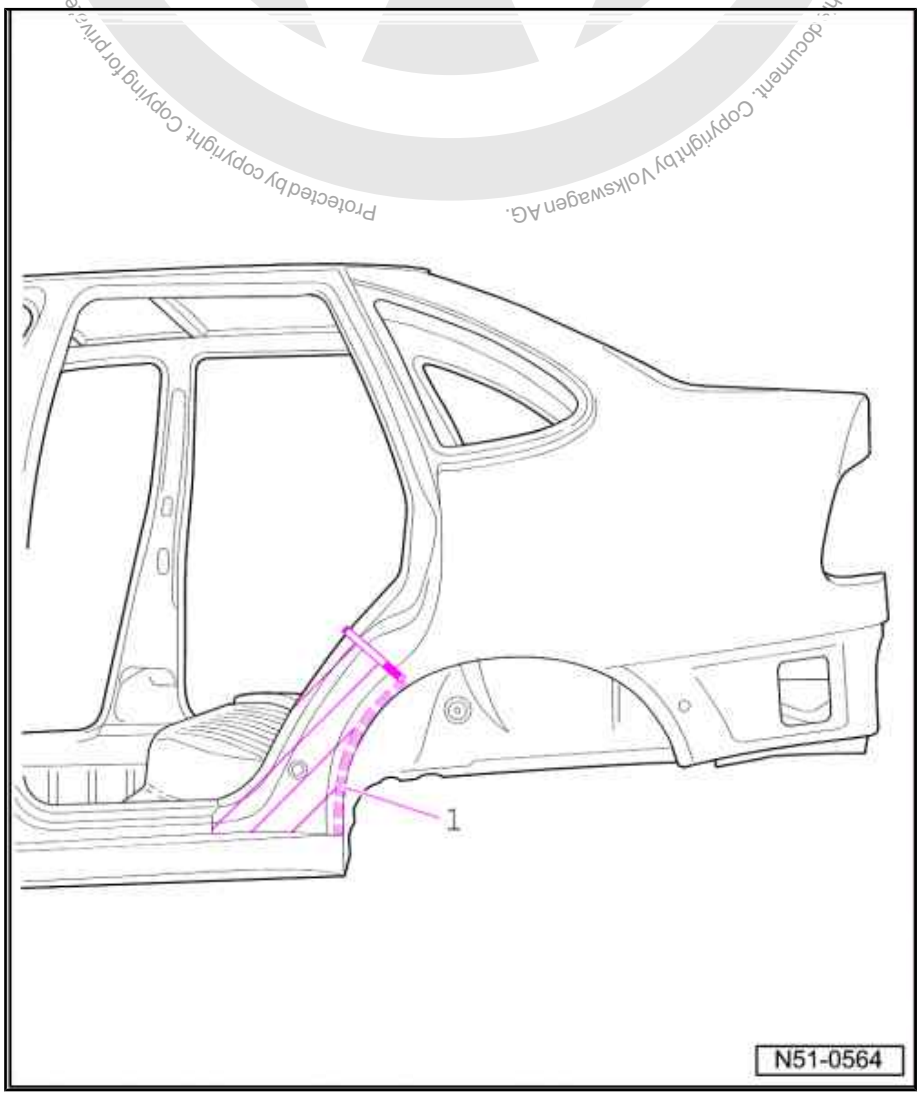

satelettronica

Note

Open wheel housing flange -1- in area of partial repair.

– Cut out side panel.
– Remove remaining material.

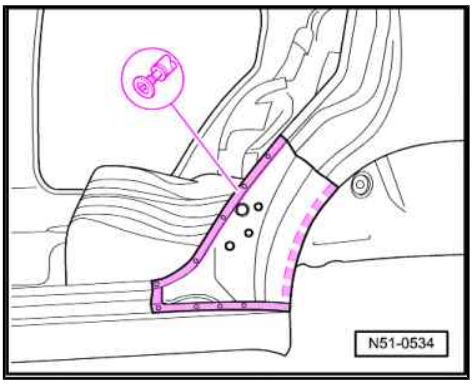

6.1.2 Replacement part

♦ Side panel

Preparing new part

– Transfer parting cut to new part and remove hatched area.
– Make holes in outer joint surface of new part.

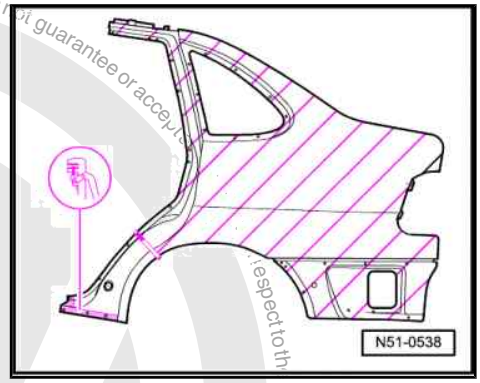

6.1.3 Welding in

– Offer up side panel and check gaps with vehicle stress free.

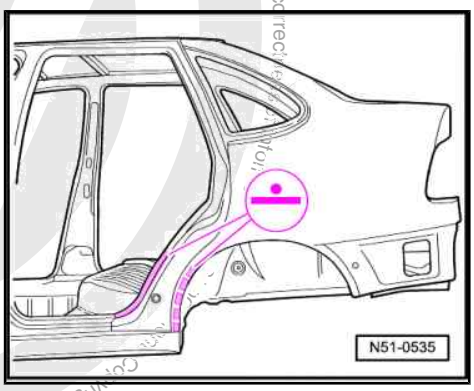

– Weld new part in, RP spot weld seam.
– Weld new part in, SG plug weld seam.

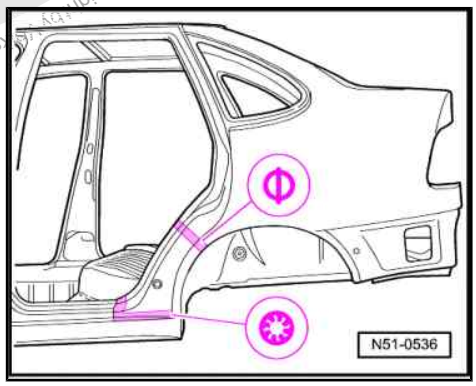

Protected by copyright. Copying for private or commercial purposes, in part or in whole, is not permitted unless authorised by Volkswagen AG. Volkswagen AG does not guarantee or accept any liability with respect to the correctness of information.
Copyright by Volkswagen AG.
satelettronica

– Weld parting cut, SG step weld seam.
– Reform wheel housing flange -1- .

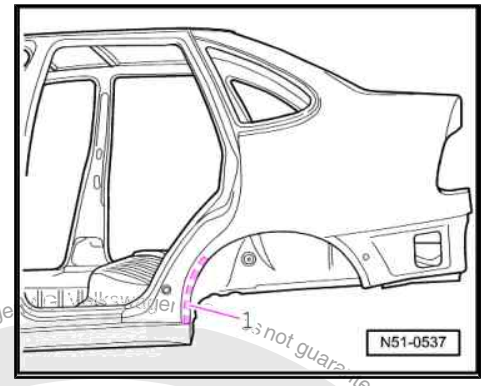

Protected by copyright. Copying for private or commercial purposes, in part or in whole, is not permitted unless authorised by Volkswagen AG. Copyright by Volkswagen AG. Volkswagen AG does not guarantee or accept any liability with respect to the correctness of information in this document.
satelettronica

RO: 51 27 55 12

7 Renewing outer side panel - partial renewal (estate)

> ⚠ WARNING
>
> *Observe safety notes!*

– ⇒ General Information; Body Repairs, General Body Repairs ; Chapter 1 - Safety notes

7.1 Removing

7.1.1 Cutting locations

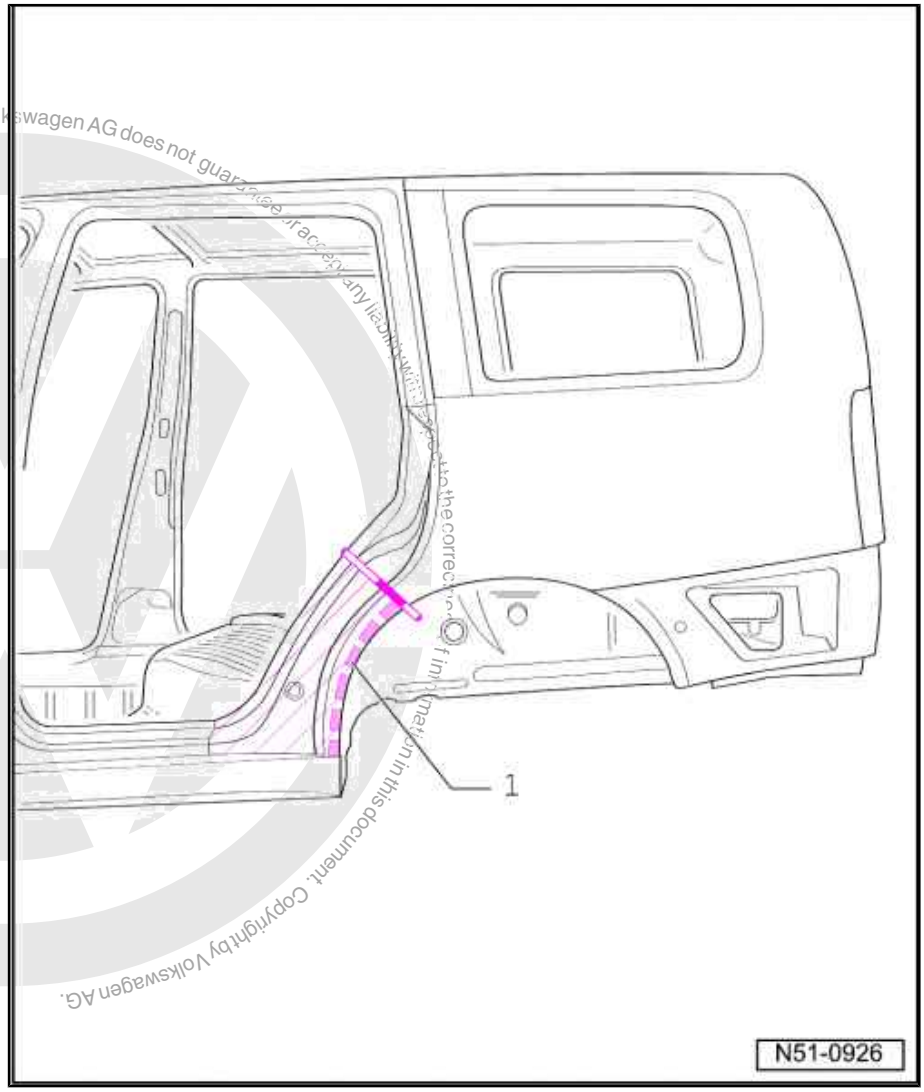

Protected by copyright. Copying for private or commercial purposes, in part or in whole, is not permitted unless authorised by Volkswagen AG. Volkswagen AG does not guarantee or accept any liability with respect to the correctness of information in this document. Copyright by Volkswagen AG.
satelettronica

Note

Open wheel housing flange -1- in area of partial repair.

– Cut out outer side panel.
– Remove remaining material.

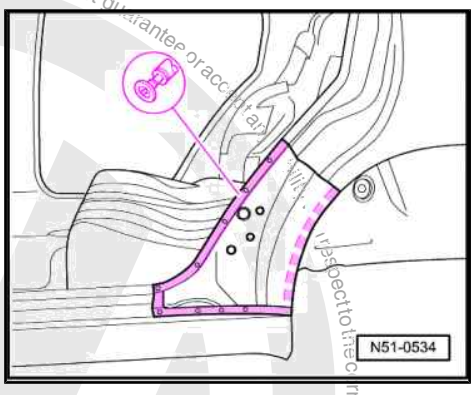

7.1.2 Replacement part

♦ Side panel

Preparing new part

– Transfer parting cut to new part and remove hatched area.
– Make holes in outer joint surface of new part.

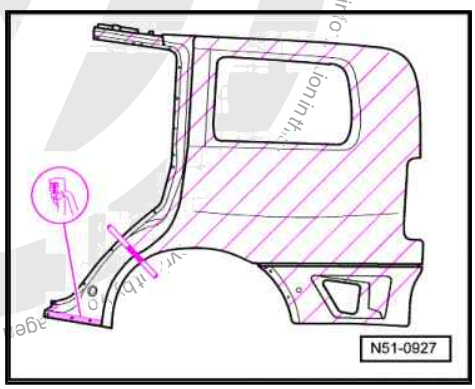

7.1.3 Welding in

– Offer up outer side panel and check gaps with vehicle stress free.

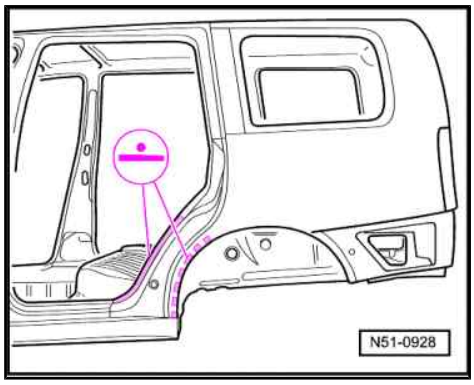

– Weld new part in, RP spot weld seam.
– Weld new part in, SG plug weld seam.

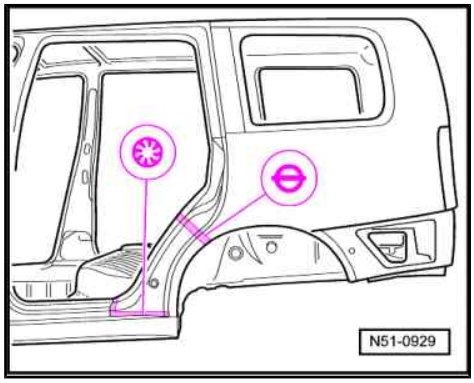

Protected by copyright. Copying for private or commercial purposes, in part or in whole, is not permitted unless authorised by Volkswagen AG. Volkswagen AG does not guarantee or accept any liability with respect to the correctness of information in this repair manual.

satelettronica

– Weld parting cut, SG step weld seam.
– Reform wheel housing flange -1- .

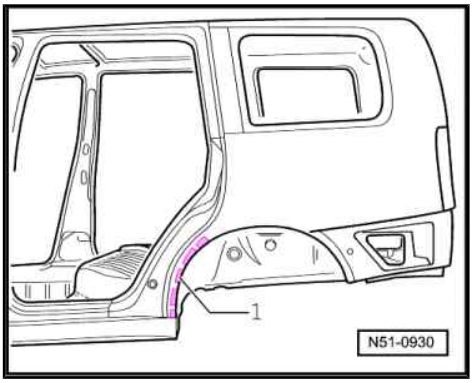

Protected by copyright. Copying for private or commercial purposes, in part or in whole, is not permitted unless authorised by Volkswagen AG. Volkswagen AG does not guarantee or accept any liability with respect to the correctness of information in this document. Copyright by Volkswagen AG.
satelettronica

RO: 51 29 55 60

8 Renewing inner side panel (estate)

WARNING

Observe safety notes!

– ⇒ General Information; Body Repairs, General Body Repairs ; Chapter 1 - Safety notes

8.1 Includes: D-pillar

Note

Offset parting cuts for side panel and D-pillar by 50 mm.

- Side panel already cut out.

8.1.1 Cutting locations

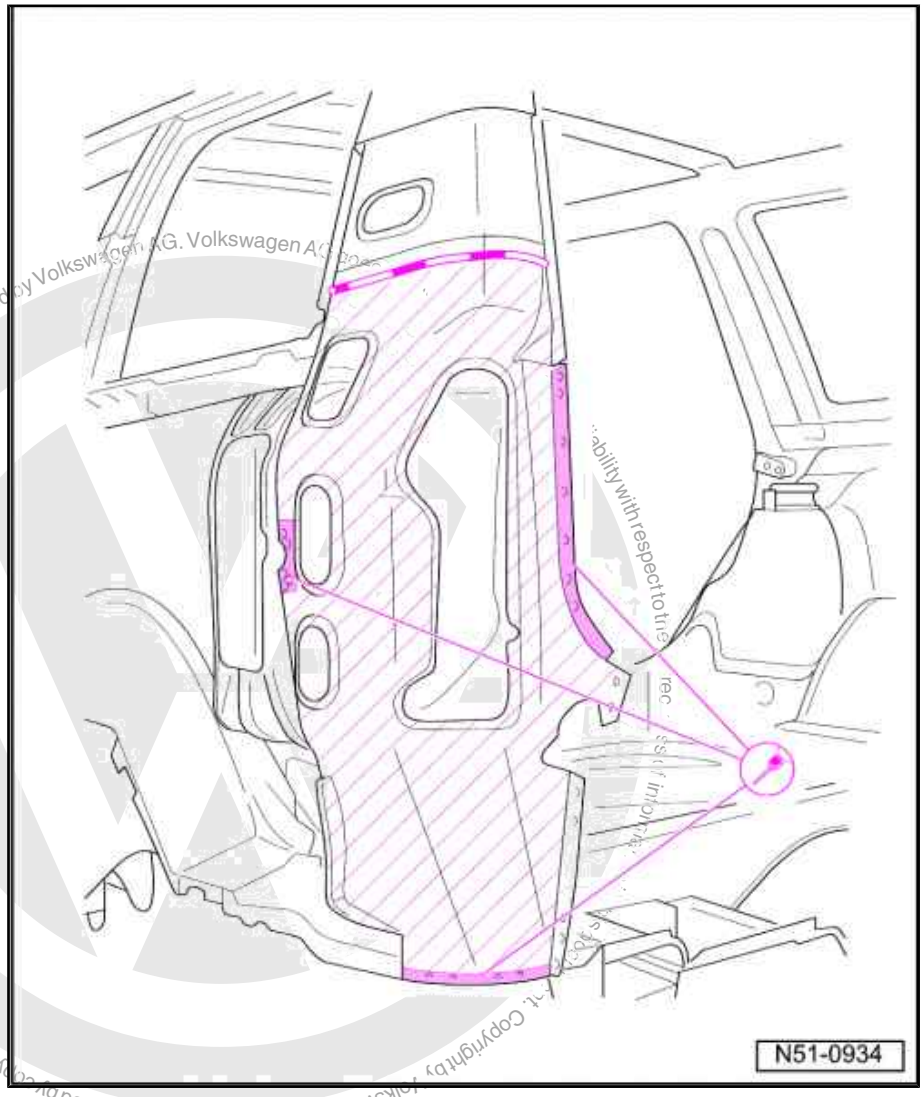

Protected by copyright. Copyright by Volkswagen AG.
Copyright by Volkswagen AG. Volkswagen AG does not accept liability with respect to the correctness of information in this document. Copyright by Volkswagen AG. Protected by copyright. Copying for private or commercial purposes, in part or in whole, is not permitted unless authorised by Volkswagen AG.
satelettronica

– Locate parting cut according to degree of damage.
– Drill out spot welds.

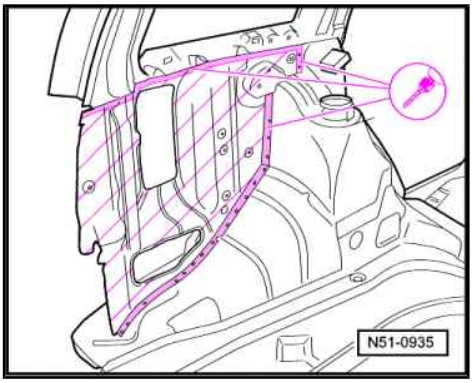

– Cut out inner side panel.
– Remove remaining material.

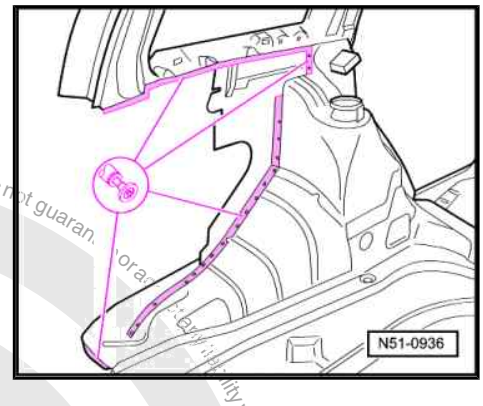

8.1.2 Replacement parts

- Side part, inner
- D-pillar

Preparing new parts

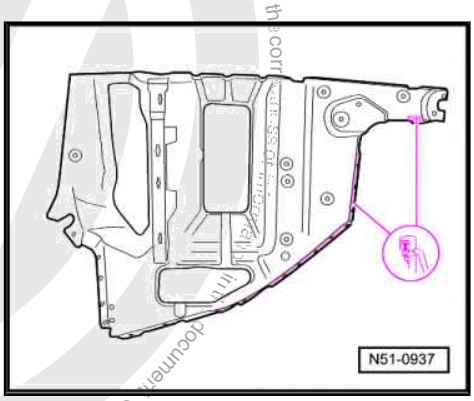

– Make holes in inner side panel in area of joints.
– Transfer separating cut to D-pillar and remove hatched area.

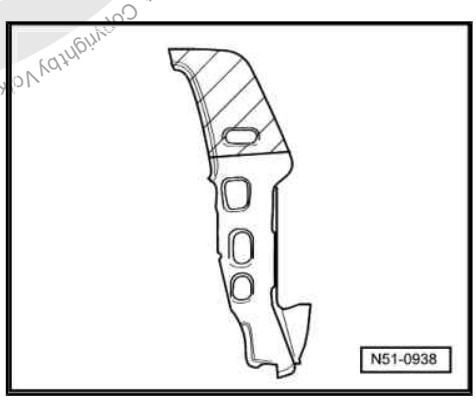

Protected by copyright. Copying for private or commercial purposes, in part or in whole, is not permitted unless authorised by Volkswagen AG. Volkswagen AG does not guarantee or accept any liability with respect to the correctness of information in this document. Copyright by Volkswagen AG.
satelettronica

8.1.3 Welding in

– Adapt inner side panel to fit and secure in position.
– Check exactness of fit with attached parts.

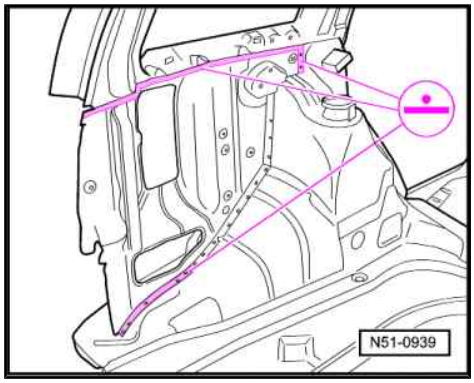

– Weld in inner side panel, RP spot weld seam.

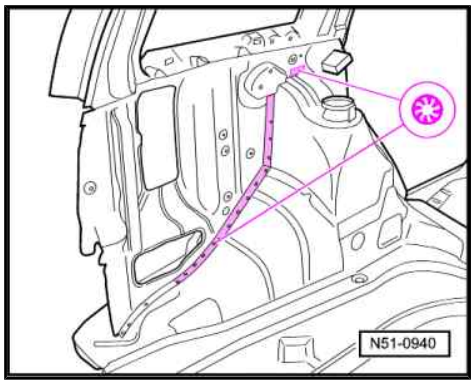

– Weld remaining joint, SG plug weld seam.
– Adapt D-pillar to fit and secure in position.

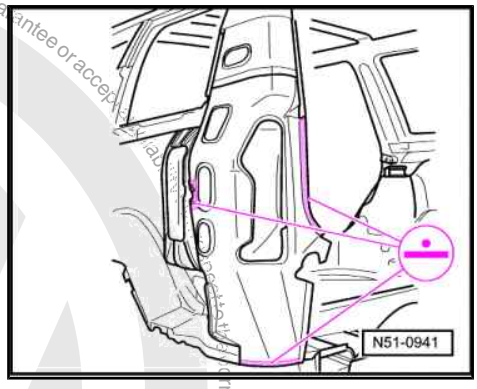

– Weld in D-pillar, RP spot weld seam.
– Weld parting cut, SG step weld seam.

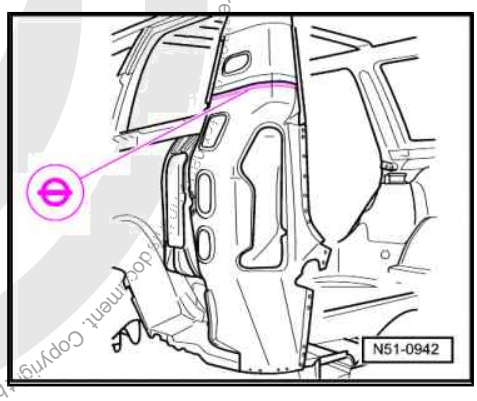

Protected by copyright. Copying for private or commercial purposes, in part or in whole, is not permitted unless authorised by Volkswagen AG. Volkswagen AG does not guarantee or accept any liability with respect to the correctness of information in this document. Copyright by Volkswagen AG.
satelettronica

RO: 51 37 55 00

9 Renewing A-pillar

WARNING

Observe safety notes!

– ⇒ General Information; Body Repairs, General Body Repairs ; Chapter 1 - Safety notes

9.1 Removing

Note

If the side member is also damaged, renew complete A-pillar.

9.1.1 Cutting locations

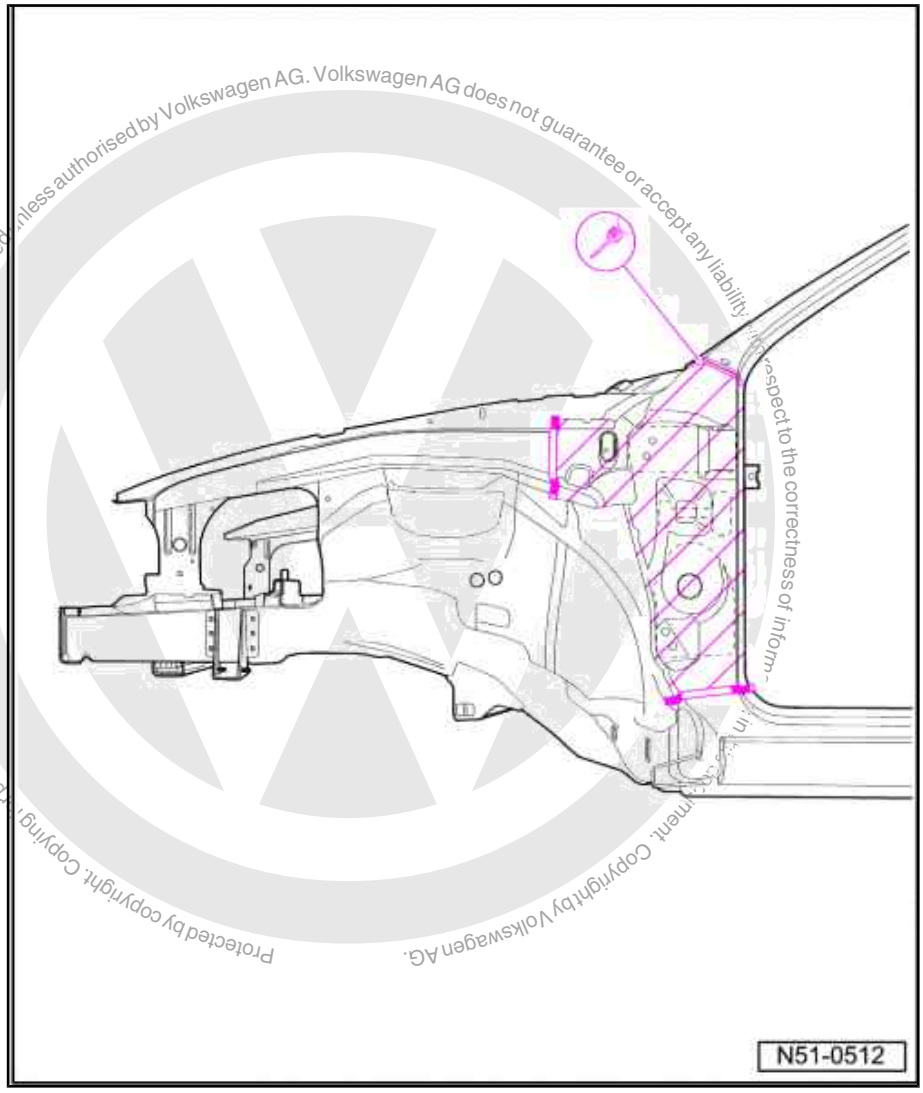

Protected by copyright. Copying for private or commercial purposes, in part or in whole, is not permitted unless authorised by Volkswagen AG. Volkswagen AG does not guarantee or accept any liability with respect to the correctness of information. Copyright by Volkswagen AG.
satelettronica

– Locate parting cut on upper wheel housing longitudinal member according to degree of damage.
– Drill out original joint to roof frame.
– Make lower parting cut above side member.
– Remove remaining material.

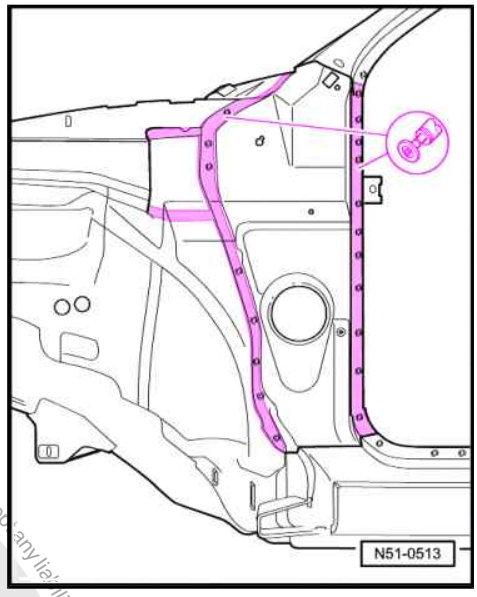

9.1.2 Replacement parts

- Longitudinal member for wheel housing
- A-pillar

Preparing new parts

– Transfer parting cuts to new parts and cut away hatched area.
– Drill 7 mm ∅ holes for SG plug weld seam.

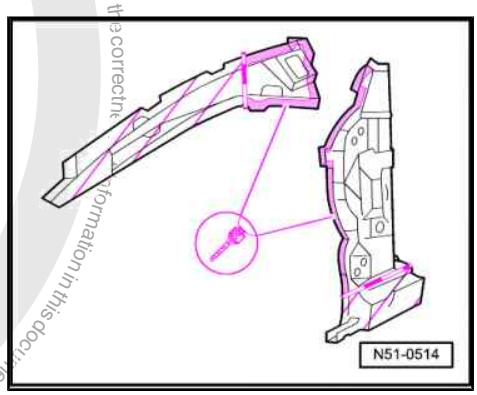

9.1.3 Welding in

– Adapt A-pillar to fit with vehicle stress free.
– Check exactness of fit with wing and door fitted.

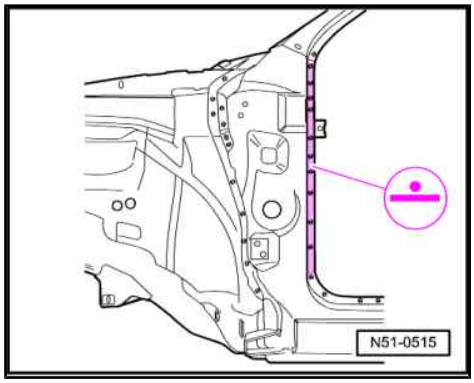

Protected by copyright. Copyright by Volkswagen AG. Copying for private or commercial purposes, in part or in whole, is not permitted unless authorised by Volkswagen AG. Volkswagen AG does not guarantee or accept any liability with respect to the correctness of information in this document.
satelettronica

– Weld in A-pillar, RP spot weld seam.
– Weld in A-pillar, SG plug weld seam.

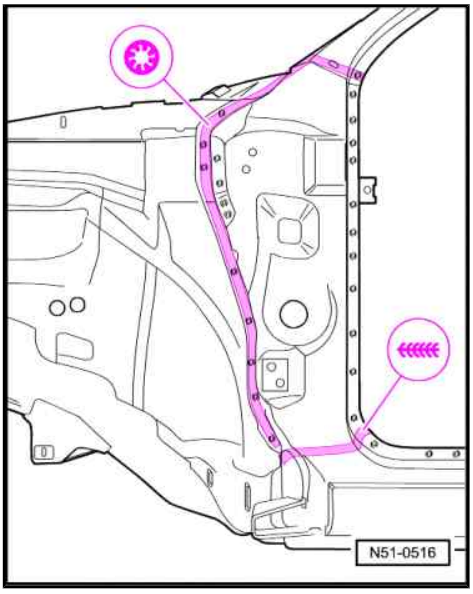

– Butt weld parting cut, SG continuous weld seam.
– Weld in longitudinal member for upper wheel housing, SG plug weld seam.
– Butt weld parting cut, SG continuous weld seam.

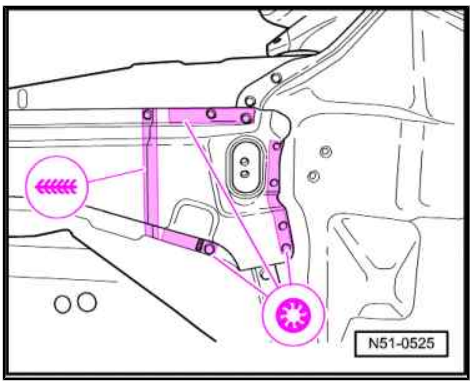

satelettronica

Protected by copyright. Copyright by Volkswagen AG.
Copyright by Volkswagen AG. Volkswagen AG does not guarantee or accept any liability with respect to the correctness of information in this document.
Copying for private or commercial purposes, in part or in whole, is not permitted unless authorised by Volkswagen AG.

Protected by copyright. Copying for private or commercial purposes, in part or in whole, is not permitted unless authorised by Volkswagen AG. Volkswagen AG does not guarantee or accept any liability with respect to the correctness of information in this document. Copyright by Volkswagen AG.

RO: 51 41 55 02

10 Renewing B-pillar

WARNING

Observe safety notes!

– ⇒ General Information; Body Repairs, General Body Repairs ; Chapter 1 - Safety notes

10.1 Removing

10.1.1 Cutting locations

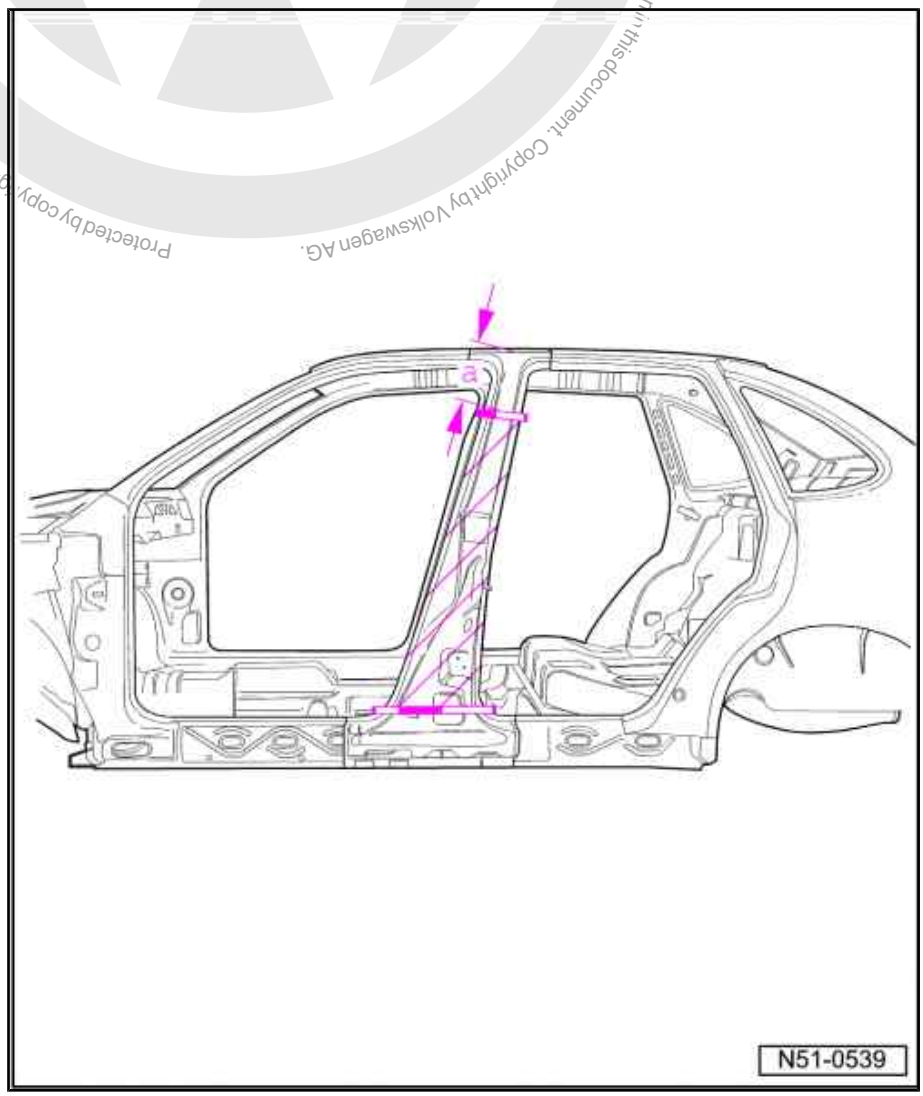

– Make parting cut below upper edge of B-pillar.

satelettronica

– Dimension a = 200 mm

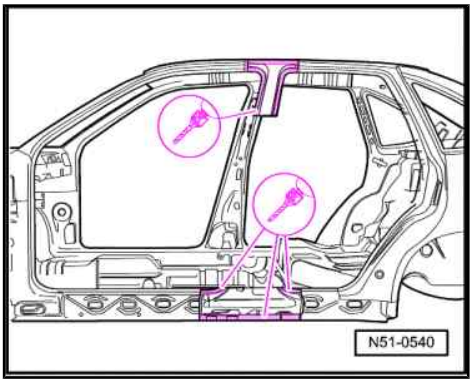

– Drill out material remains.
– Separate original joint from inside.

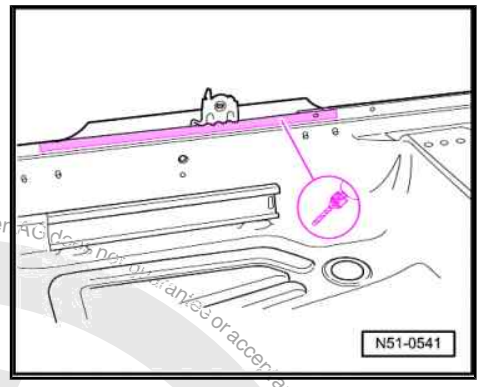

10.1.2 Replacement parts

- Outer B-pillar
- Inner B-pillar

Preparing new parts

– Make holes in upper seam of B-pillar.

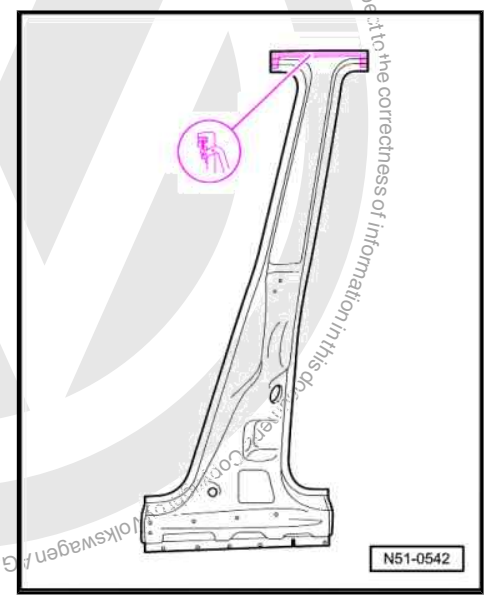

Protected by copyright. Copying for private or commercial purposes, in part or in whole, is not permitted unless authorised by Volkswagen AG. Volkswagen AG does not guarantee or accept any liability with respect to the correctness of information in this document. Copyright by Volkswagen AG.
satelettronica

10.1.3 Welding in

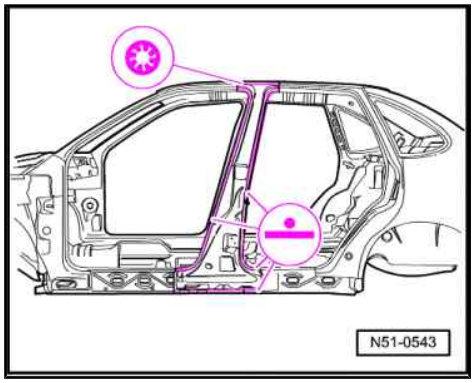

- Adapt inner and outer B-pillar to fit with vehicle stress free, and tack weld in position.
- Check exactness of fit with attached parts.
- Weld in new part, RP spot weld seam.

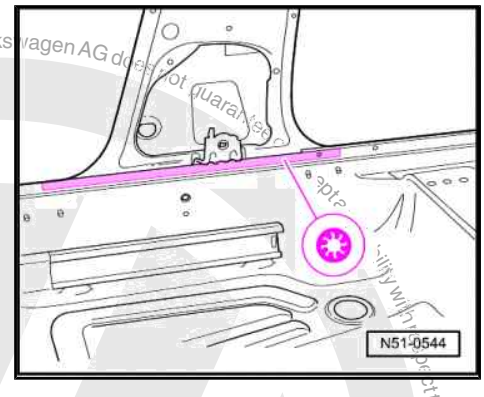

- Weld in top of B-pillar, SG plug weld seam.
- Weld in inner remaining joint, SG plug weld seam.

Protected by copyright. Copying for private or commercial purposes, in part or in whole, is not permitted unless authorised by Volkswagen AG. Volkswagen AG does not guarantee the correctness of information in this document. Copyright by Volkswagen AG.

satelettronica

RO: 51 45 55 00

11 Renewing outer side member

WARNING

Observe safety notes!

– ⇒ General Information; Body Repairs, General Body Repairs ; Chapter 1 - Safety notes

11.1 Removing

Note

- *A reinforcement in side member between A an B-pillar is welded to B-pillar with a SG plug weld seam.*
- *The B-pillar must not be damaged when cutting out.*

11.1.1 Cutting locations

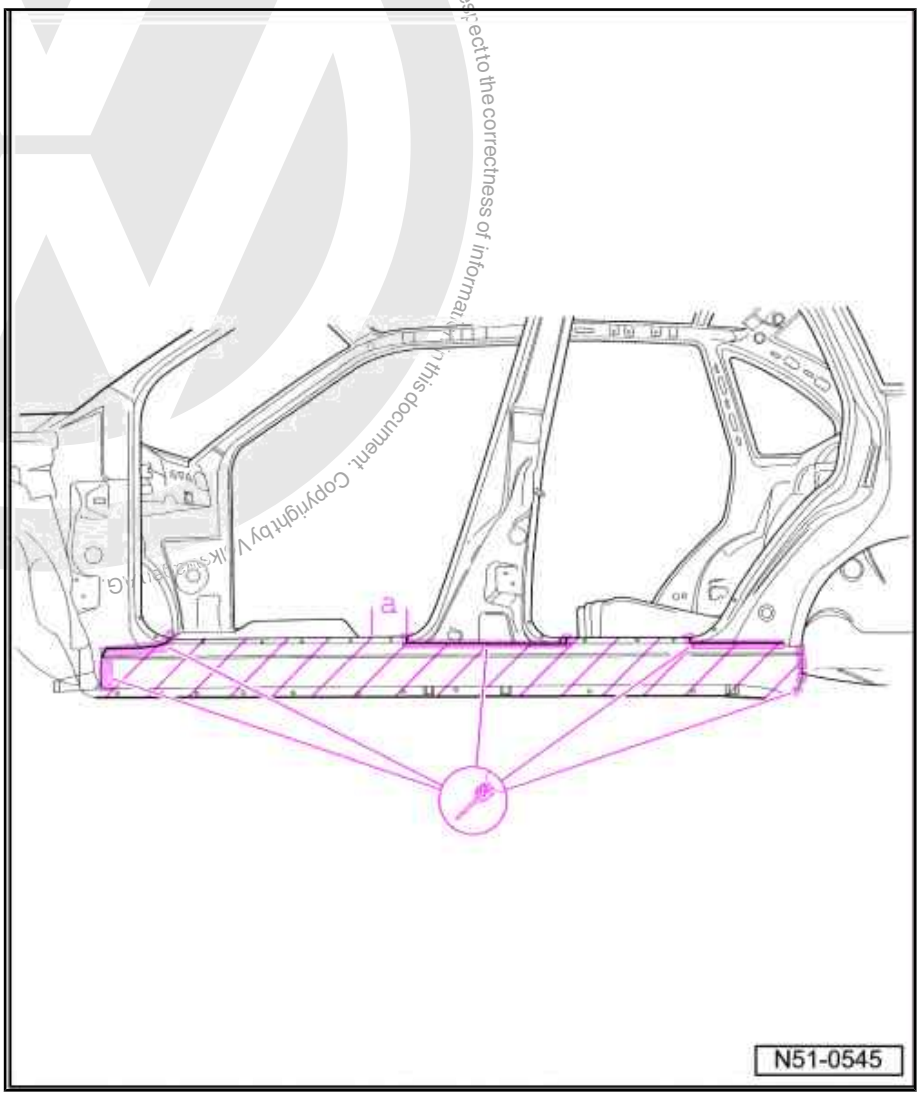

Protected by copyright. Copying for private or commercial purposes, in part or in whole, is not permitted unless authorised by Volkswagen AG. Volkswagen AG does not guarantee or accept any liability with respect to the correctness of information in this document. Copyright by Volkswagen AG.
satelettronica

– Dimension a = 50 mm
– Drill out spot welds.
– Separate original joint to floor panel.
– Remove remaining material.

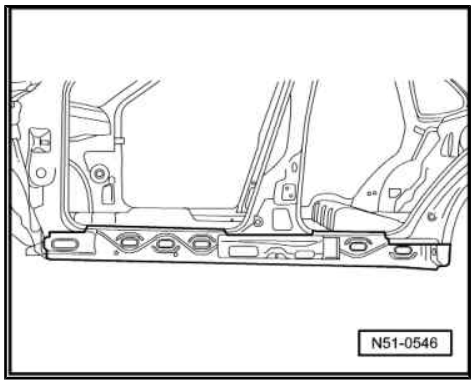

11.1.2 Replacement part

♦ Side member

Preparing new part

– Make holes in outer joint surface of new part.

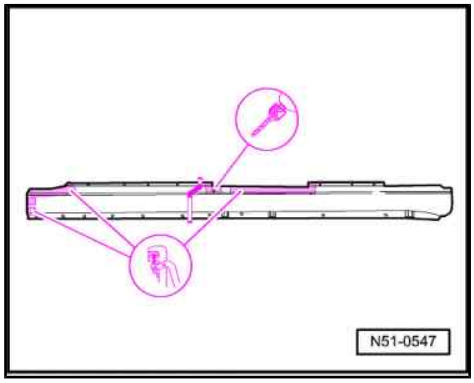

– Separate new part in weld area of front reinforcement to B-pillar.
– Drill holes for SG plug weld seam in inner reinforcement in area of joint to B-pillar.

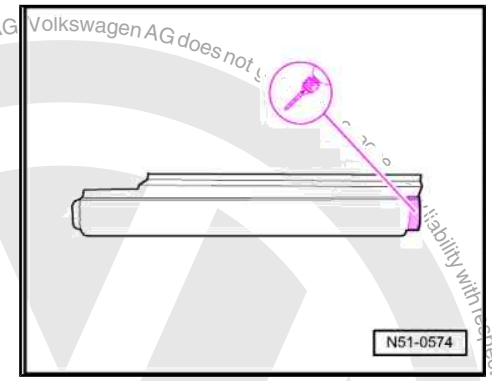

11.1.3 Welding in

– Adapt forward new part to fit with vehicle stress free.
– Weld in forward new part, RP spot weld seam.

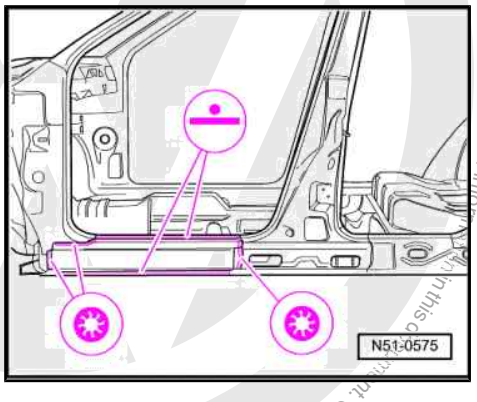

Protected by copyright. Copying for private or commercial purposes, in part or in whole, is not permitted unless authorised by Volkswagen AG. Volkswagen AG does not g... liability with respect to the correctness of information in this document. Copyright by Volkswagen AG.
satelettronica

– Weld remaining joint, SG plug weld seam.
– Adapt rear new part to fit with vehicle stress free.

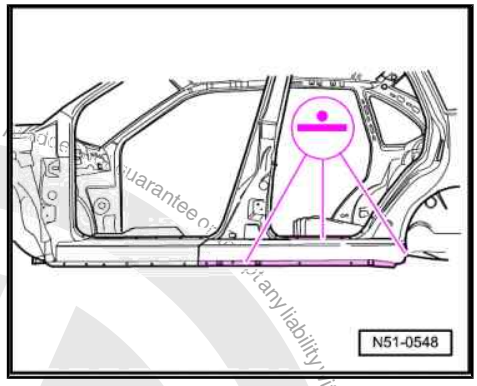

– Weld in rear new part, RP spot weld seam.
– Weld remaining joint, SG plug weld seam.
– Weld parting cut, SG step weld seam.

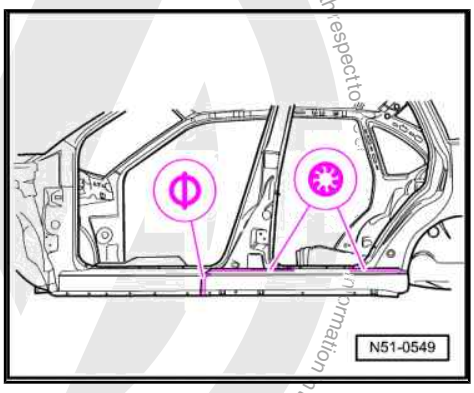

Protected by copyright. Copying for private or commercial purposes, in part or in whole, is not permitted unless authorised by Volkswagen AG. Volkswagen AG does not guarantee or assume any liability with respect to the correctness of information in this document. Copyright by Volkswagen AG.
satelettronica

RO: 51 45 55 02

12 Renewing outer side panel - partial renewal

WARNING

Observe safety notes!

– ⇒ General Information; Body Repairs, General Body Repairs ; Chapter 1 - Safety notes

12.1 Removing

12.1.1 Cutting locations

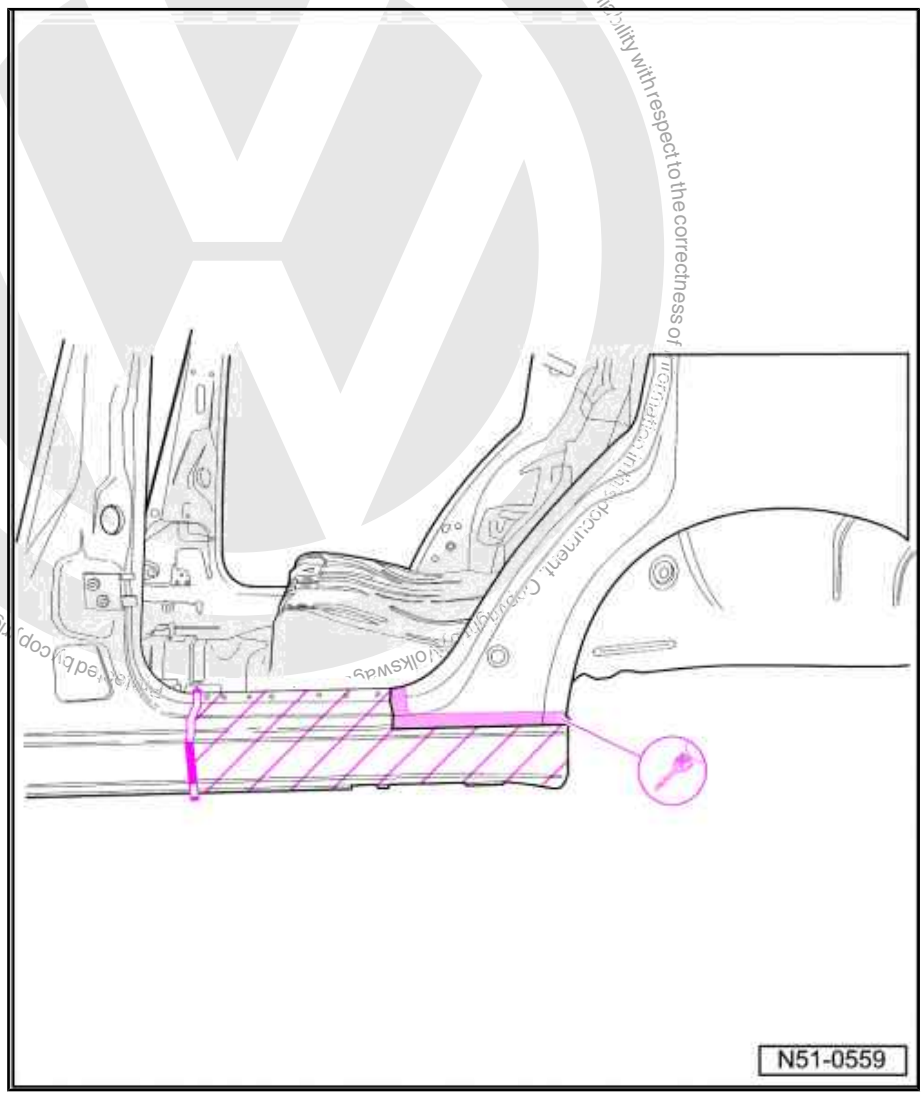

– Drill out side member in area of side panel and B-pillar.

satelettronica

- Separate original joint to floor panel.
- Remove remaining material.

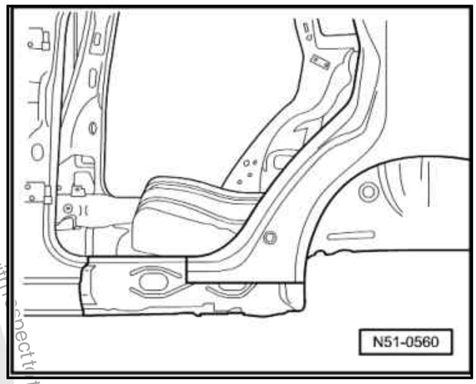

12.1.2 Replacement part

♦ Side member

Preparing new part

- Transfer parting cut to new part and remove hatched area.
- Make holes in outer joint surface of new part.

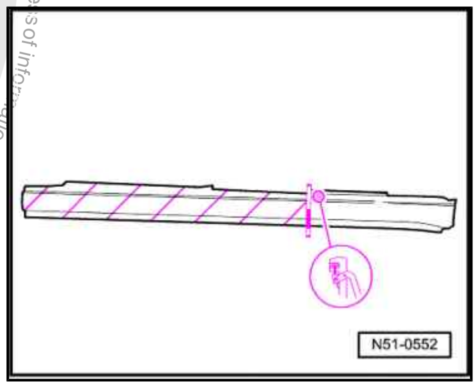

12.1.3 Welding in

- Adapt side member to fit with vehicle stress free.

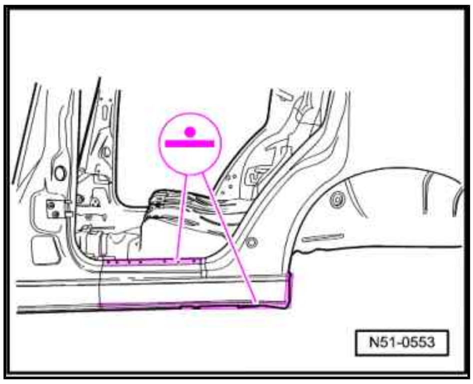

- Weld new part in, RP spot weld seam.
- Weld new part in, SG plug weld seam.
- Weld parting cut, SG step weld seam.

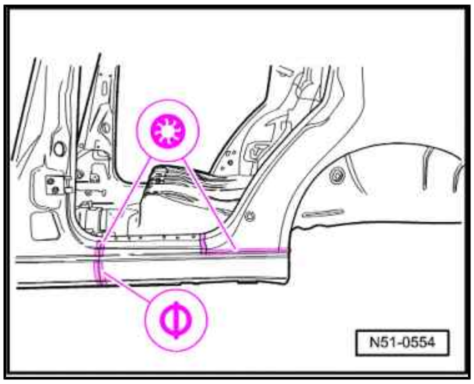

Protected by copyright. Copying for private or commercial purposes, in part or in whole, is not permitted unless authorised by Volkswagen AG. Volkswagen AG does not guarantee or accept any liability with respect to the correctness of information in this document. Copyright by Volkswagen AG.

sateletronica

RO: 51 47 55 52

13 Renewing inner side member - partial renewal

WARNING

Observe safety notes!

– ⇒ General Information; Body Repairs, General Body Repairs ; Chapter 1 - Safety notes

13.1 Removing

13.1.1 Cutting locations

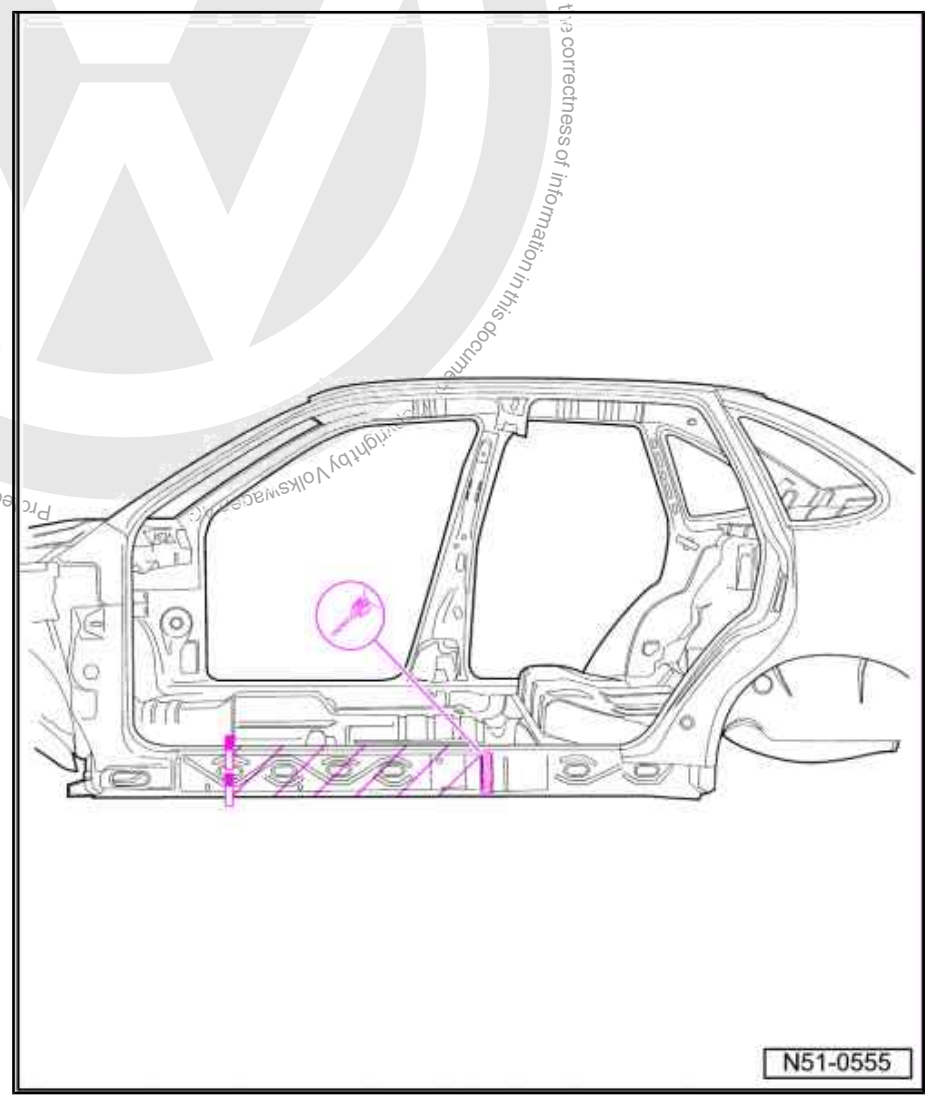

– Separate original joint to floor panel.
– Drill out remaining joint.
– Remove remaining material.

Protected by copyright. Copying for private or commercial purposes, in part or in whole, is not permitted unless authorised by Volkswagen AG. Volkswagen AG does not guarantee or accept any liability with respect to the correctness of information in this document. Copyright by Volkswagen AG.
satelettronica

13.1.2 Replacement part

- Inner side member parts designation: web plate for side member

Preparing new part

– Transfer parting cut to new part and remove hatched area.

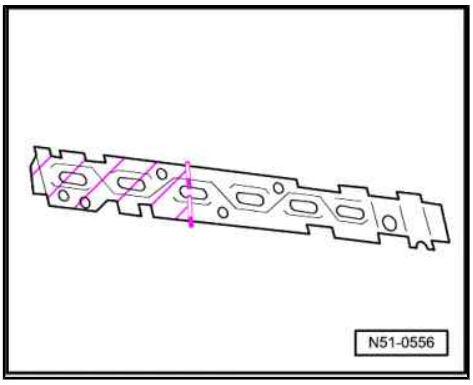

13.1.3 Welding in

– Adapt inner side member to fit with vehicle stress free.

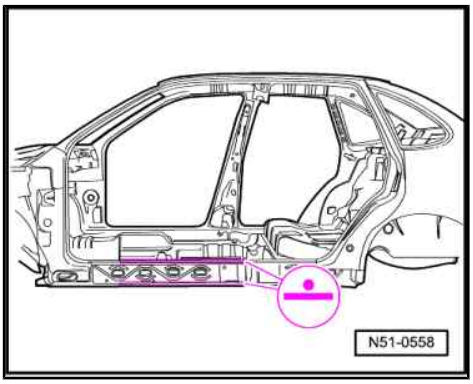

– Weld new part in, RP spot weld seam.
– Weld new part in, SG plug weld seam.
– Weld parting cut, SG continuous weld seam.

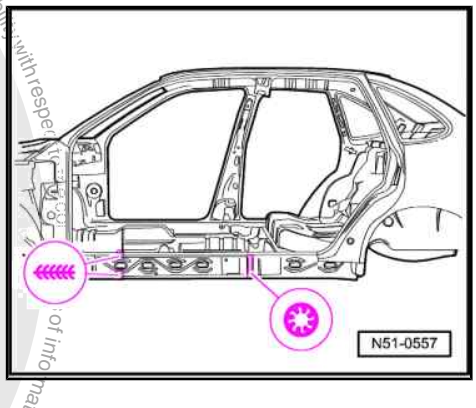

Protected by copyright. Copying for private or commercial purposes, in part or in whole, is not permitted unless authorised by Volkswagen AG. Volkswagen AG does not guarantee or accept any liability with respect to the correctness of information in this document. Copyright by Volkswagen AG.
satelettronica

RO: 51 73 55 50

14 Renewing floor panel

WARNING

Observe safety notes!

– ⇒ General Information; Body Repairs, General Body Repairs ; Chapter 1 - Safety notes

14.1 Removing

Note

- *Seat cross member and guide rail may only be replaced complete.*
- *A 20 mm wide strip of sheet metal must remain at the transition to the bulkhead.*

14.1.1 Cutting locations

1 - Cutting line complete re-

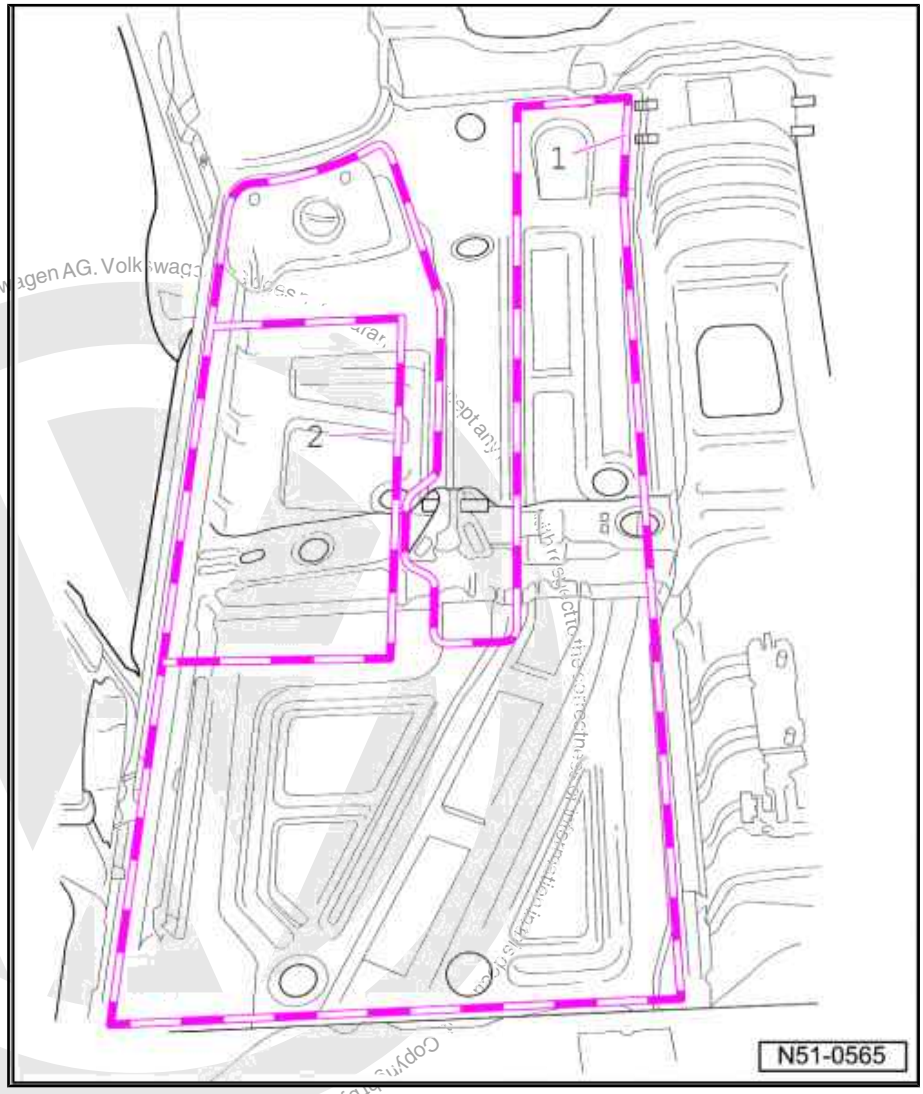

Protected by copyright. Copying for private or commercial purposes, in part or in whole, is not permitted unless authorised by Volkswagen AG. Volkswagen AG

satelettronica

placement

2 - Cutting line partial repair

– Cut out floor panel.

14.1.2 Part section repair

– At parting cut -2- , carry out offset overlap weld to both sides, staggered SG continuous weld seam.

– Remove remaining material.

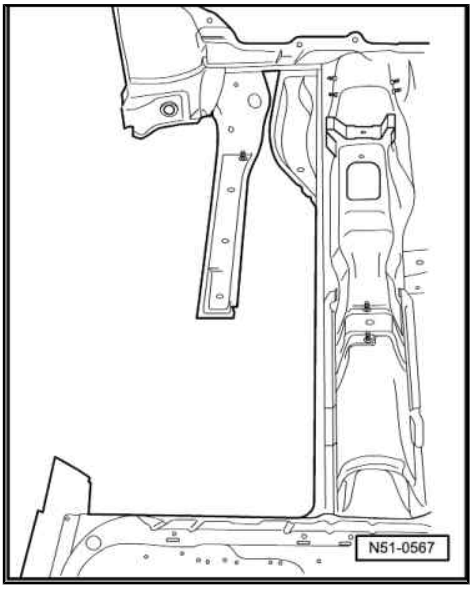

14.1.3 Replacement parts

- Floor plate
- Floor panel reinforcement
- Seat cross member
- Guide rail
- Cover plate
- Weld nut
- Weld pins

Preparing new parts

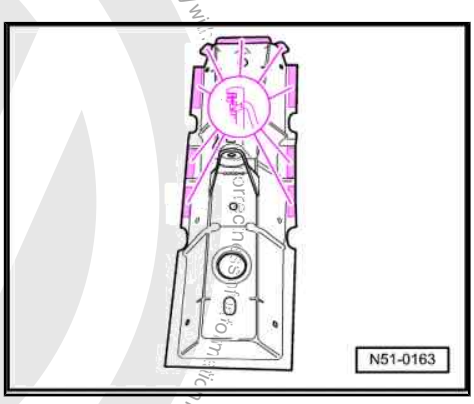

Protected by copyright. Copying for private or commercial purposes, in part or in whole, is not permitted unless authorised by Volkswagen AG. Volkswagen AG does not guarantee or accept any liability with respect to the correctness of information in this document. Copyright by Volkswagen AG.

satelettronica

– Make holes in outer joint surface of new part.
– Centralize weld nut and weld in, SG continuous weld seam.
– Make holes in outer joint surface of new part.
– Drill 7 mm ∅ holes for SG plug weld seam.

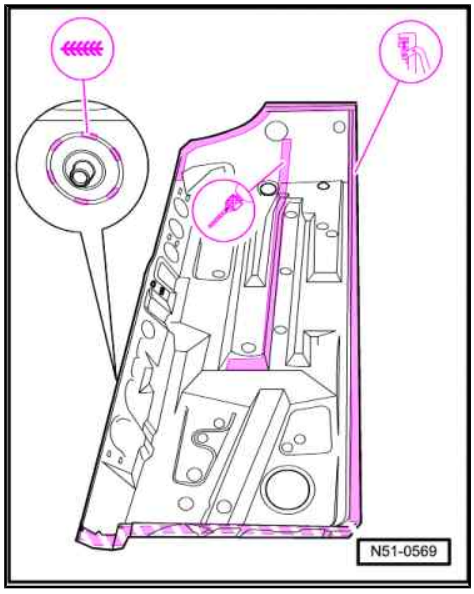

– Transfer parting cut to new part and cut out.
– Make holes in reinforcement in area of outer joints.

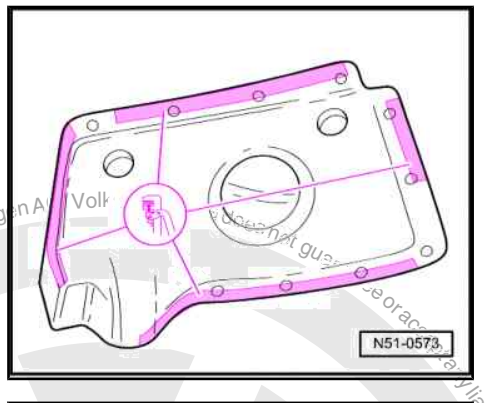

14.1.4 Welding in

– Adapt cover plate and hold in position.

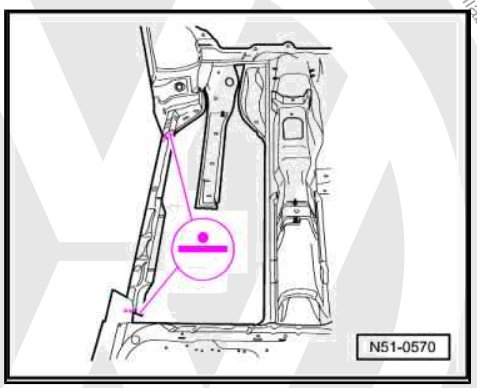

Protected by copyright. Copying for private or commercial purposes, in part or in whole, is not permitted unless authorised by Volkswagen AG. Copyright by Volkswagen AG. No warranty liability with respect to the correctness of information in this document.
satelettronica

– Weld in cover plate, RP spot weld.
– Adapt new part to fit and hold in position.
– Weld in floor plate, RP spot weld.
– At transition to bulkhead, staggered SG continuous weld seam.

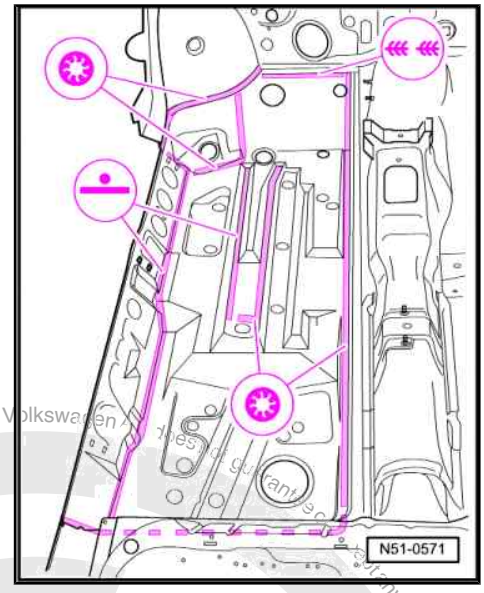

– Weld remaining joint, SG plug weld seam.
– Align seat cross member and hold in position.

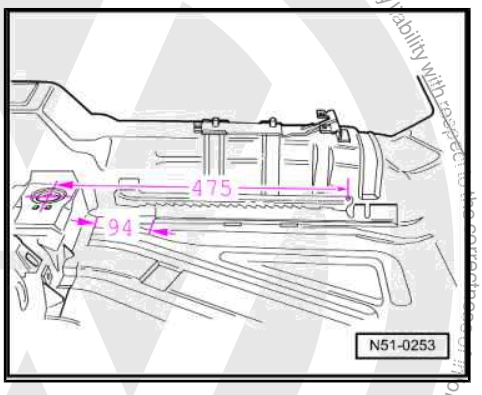

Dimensions in mm

– Weld in seat cross member, RP spot weld seam.
– Weld remaining joint, SG plug weld seam.

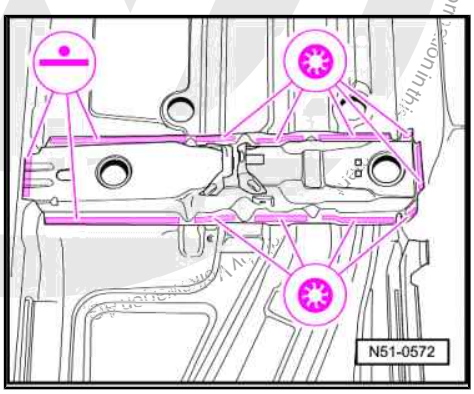

Protected by copyright. Copying for private or commercial purposes, in part or in whole, is not permitted unless authorised by Volkswagen AG. Volkswagen AG does not guarantee or assume any liability with respect to the correctness of information in this document.
satelettronica

14.1.5 Weld pin position measurements

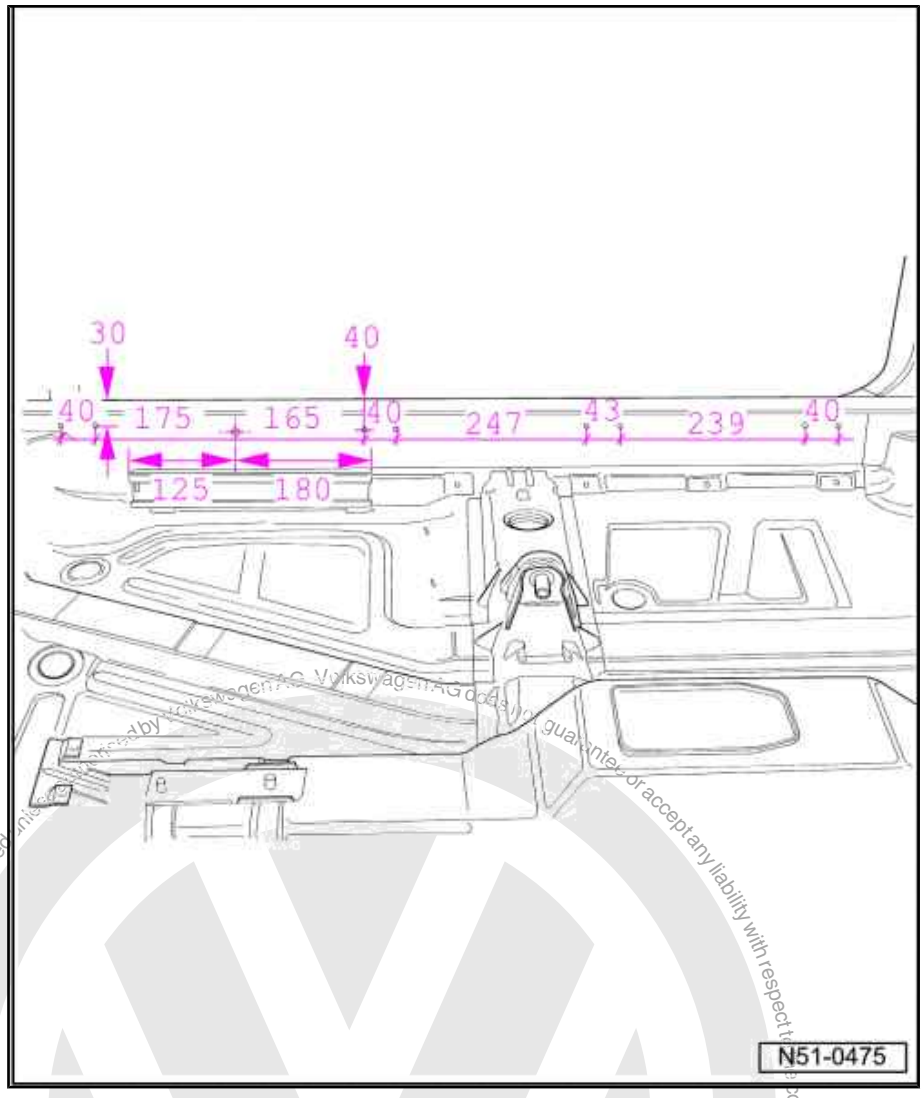

Dimensions in mm

– Weld in seat guide rail, SG plug weld seam.

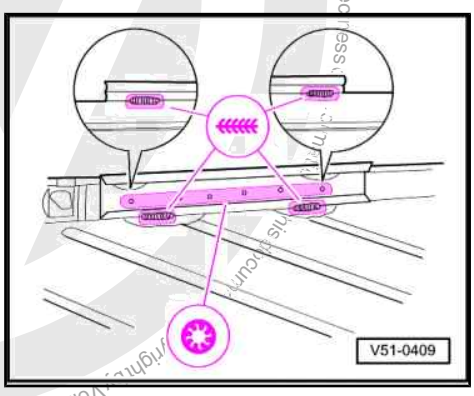

satelettronica

– Weld remaining joint in, SG continuous seam.
– Weld in reinforcement, RP plug weld seam.

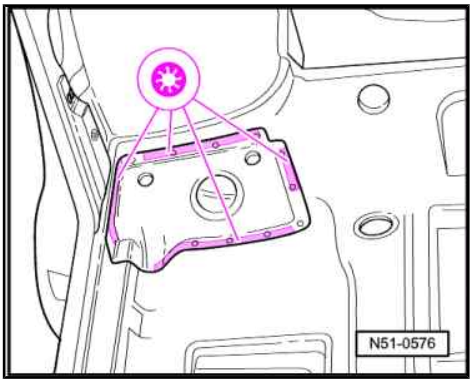

Protected by copyright. Copying for private or commercial purposes, in part or in whole, is not permitted unless authorised by Volkswagen AG. Volkswagen AG does not guarantee or accept any liability with respect to the correctness of information in this document. Copyright by Volkswagen AG.

satelettronica

53 – Body - rear

RO: 53 05 55 00

1 Renewing rear cross panel

WARNING

Observe safety notes!

– ⇒ General Information; Body Repairs, General Body Repairs ; Chapter 1 - Safety notes

1.1 Removing

1.1.1 Cutting locations

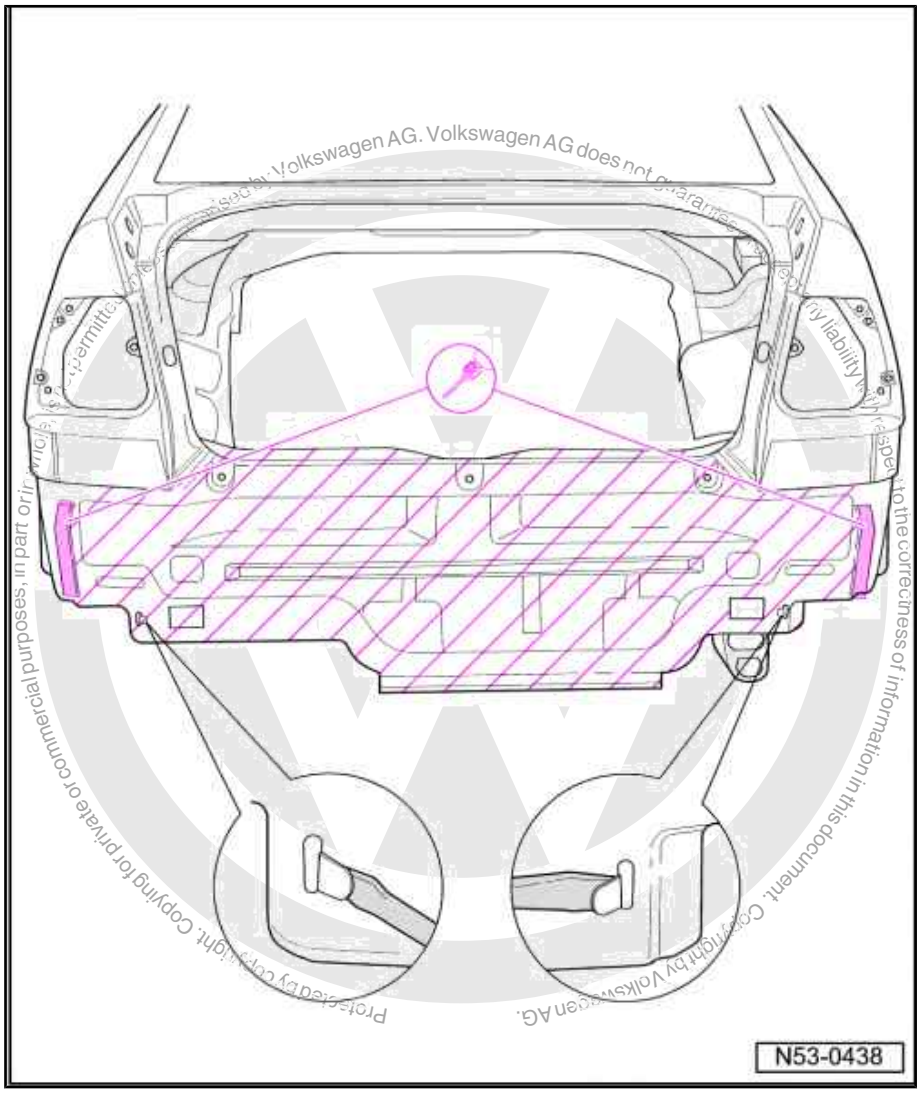

– Open out panel tabs -enlargement-.

– Drill out side panel.

satelettronica

– Cut out rear cross panel.

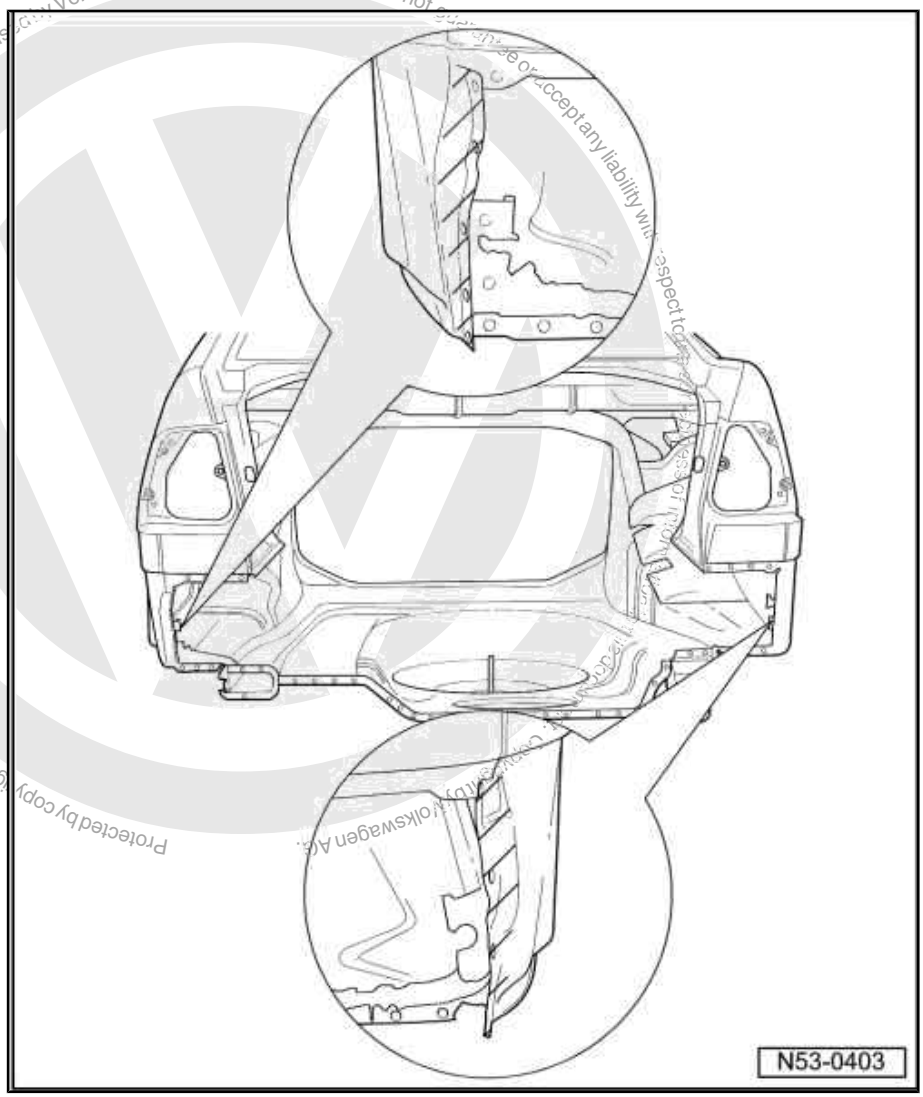

– Bend hatched area of side panel outwards.
– Remove remaining material.

1.1.2 Replacement part

♦ Rear cross panel

1.1.3 Welding in

– Adapt new part to fit and hold in position.

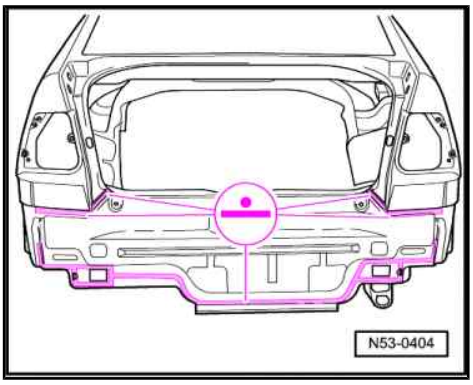

satelettronica

– Weld new part in, RP spot weld seam.
– Adapt left and right side panels.
– Weld remaining joint, SG plug weld seam.

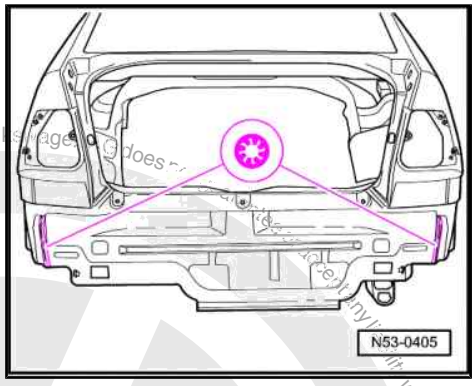

Protected by copyright. Copying for private or commercial purposes, in part or in whole, is not permitted unless authorised by Volkswagen AG. Volkswagen AG does not guarantee or accept any liability with respect to the correctness of information in this document. Copyright by Volkswagen AG.

satelettronica

Protected by copyright. Copying for private or commercial purposes, in part or in whole, is not permitted unless authorised by Volkswagen AG. Volkswagen AG does not guarantee or accept any liability with respect to the correctness of information in this document. Copyright by Volkswagen AG.

RO: 53 05 55 10

2 Renewing rear cross panel (estate)

> **WARNING**
>
> *Observe safety notes!*

– ⇒ General Information; Body Repairs, General Body Repairs ; Chapter 1 - Safety notes

2.1 Removing

2.1.1 Cutting locations

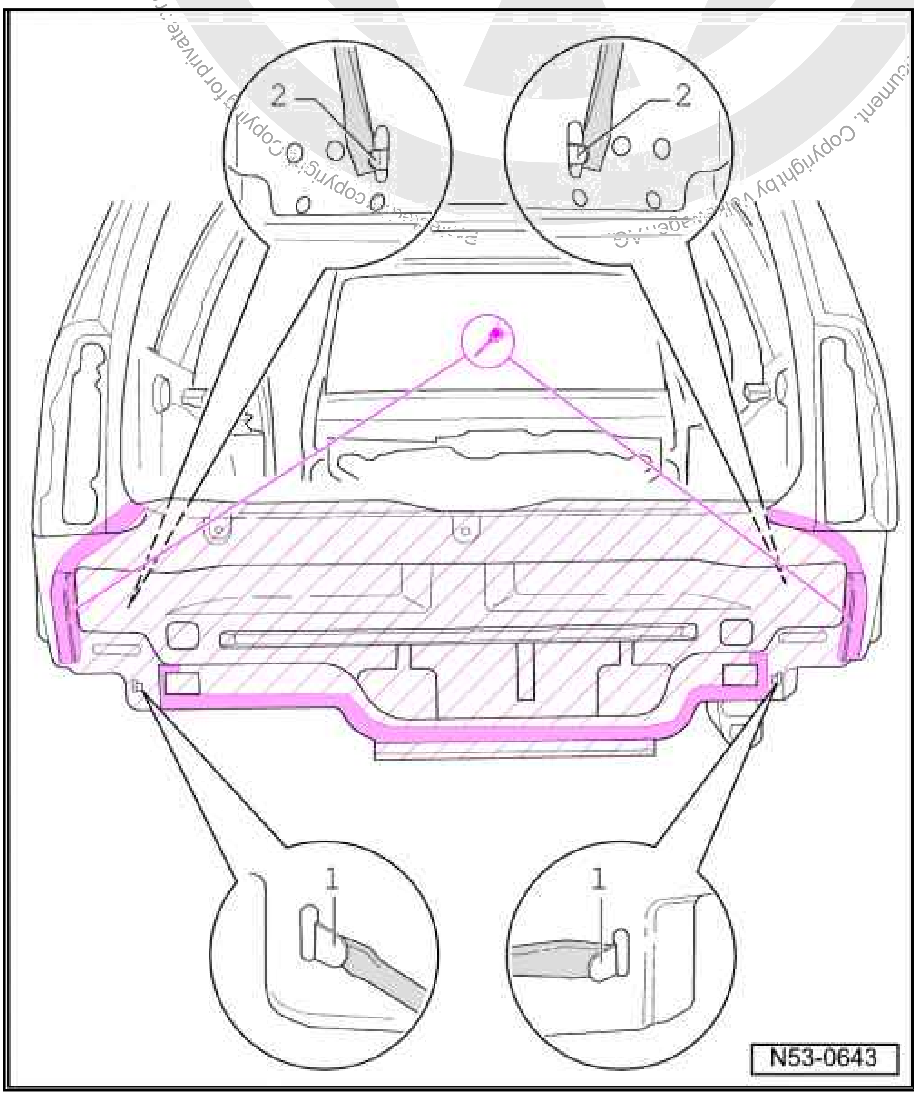

– Open out outer panel tabs -1- .

– Open out inner panel tabs -2- .

– Cut out rear cross panel.

– Remove remaining material.

satelettronica

2.1.2 Replacement part

♦ Rear cross panel

Preparing new part

– Bend hatched area of cross panel inwards -arrows- .

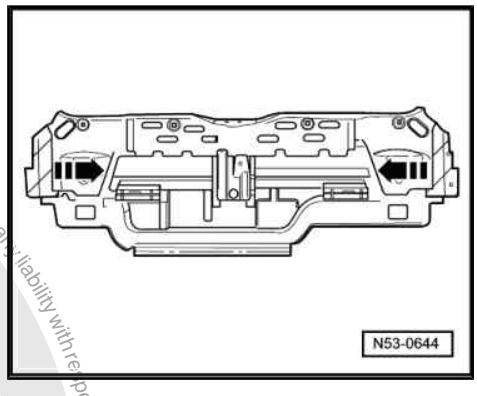

2.1.3 Welding in

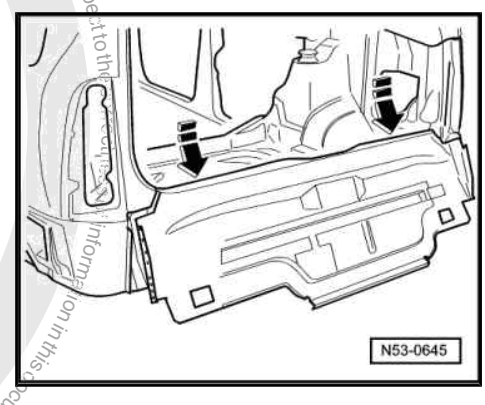

– Hook in top left and right of cross panel on inside and hold in position.

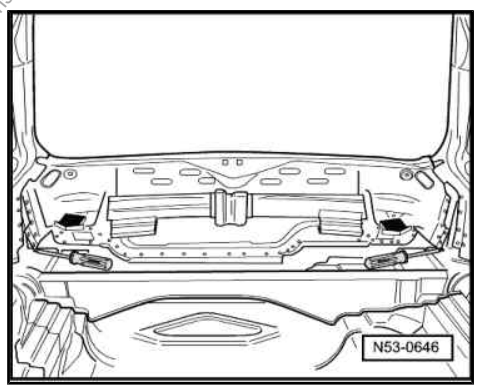

Protected by copyright. Copyright by Volkswagen AG.
Volkswagen AG does not guarantee or accept any liability with respect to the correctness of information in this document. Copyright by Volkswagen AG.
whole, is not permitted unless authorised by Volkswagen AG. Volkswagen AG does not guarantee or accept any liability with respect to the correctness of information in this document. Copyright by Volkswagen AG.
commercial purposes, in part or in whole, is not permitted unless authorised by Volkswagen AG. Volkswagen AG does not guarantee or accept any liability with respect to the correctness of information in this document. Copyright by Volkswagen AG.
satelettronica

– Slip lower left and right of cross panel over web plates using a screwdriver.
– The hatched area of the cross panel must be pushed between the inner side panel and D-pillar.

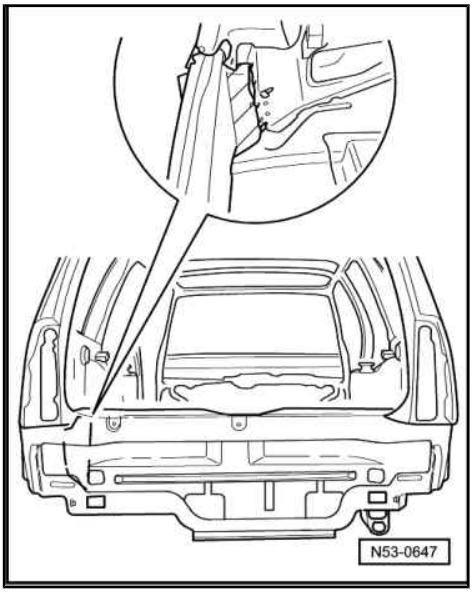

– The inner panel tabs locates the cross panel on the wheel housings.
– Adapt new part to fit and hold in position.
– Check gaps and shut lines to rear attached parts.

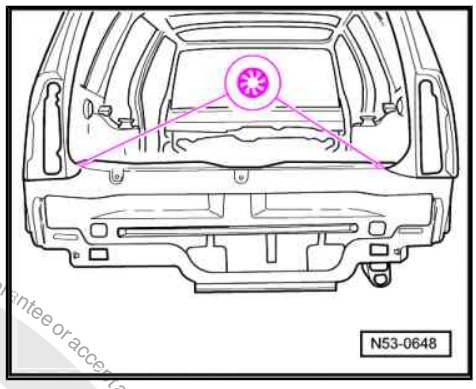

– Weld new part in, SG plug weld seam.

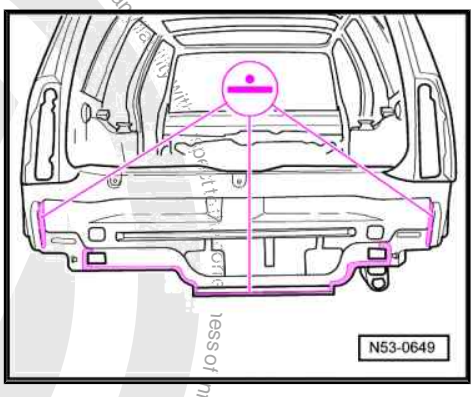

– Spot weld rear cross panel, RP spot weld seam.

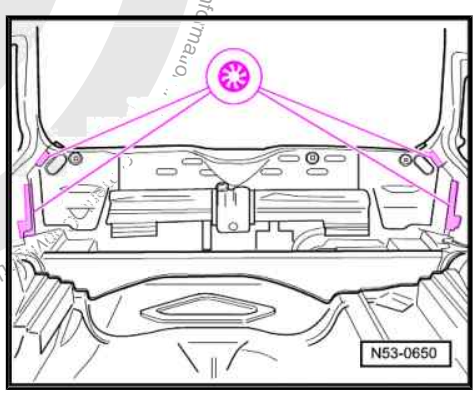

Protected by copyright. Copying for private or commercial purposes, in part or in whole, is not permitted unless authorised by Volkswagen AG. Volkswagen AG does not guarantee or accept any liability with respect to the correctness of information.
Copyright by Volkswagen AG.
satelettronica

– Weld new part in, SG plug weld seam.
– Weld remaining joint from underside, SG plug weld seam.

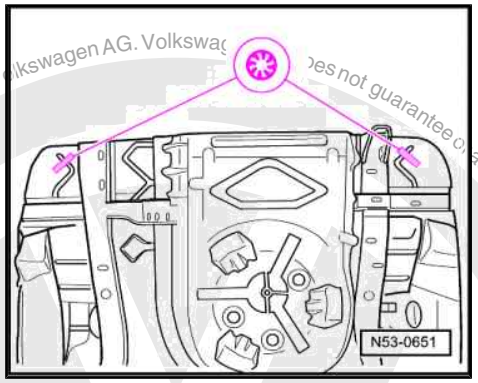

Protected by copyright. Copying for private or commercial purposes, in part or in whole, is not permitted unless authorised by Volkswagen AG. Volkswagen AG does not guarantee or accept any liability with respect to the correctness of information in this document. Copyright by Volkswagen AG.
satelettronica

RO: 53 10 55 50

3 Renewing tail light mounting

> ⚠ WARNING
>
> *Observe safety notes!*

– ⇒ General Information; Body Repairs, General Body Repairs ; Chapter 1 - Safety notes

3.1 Removing

3.1.1 Cutting locations

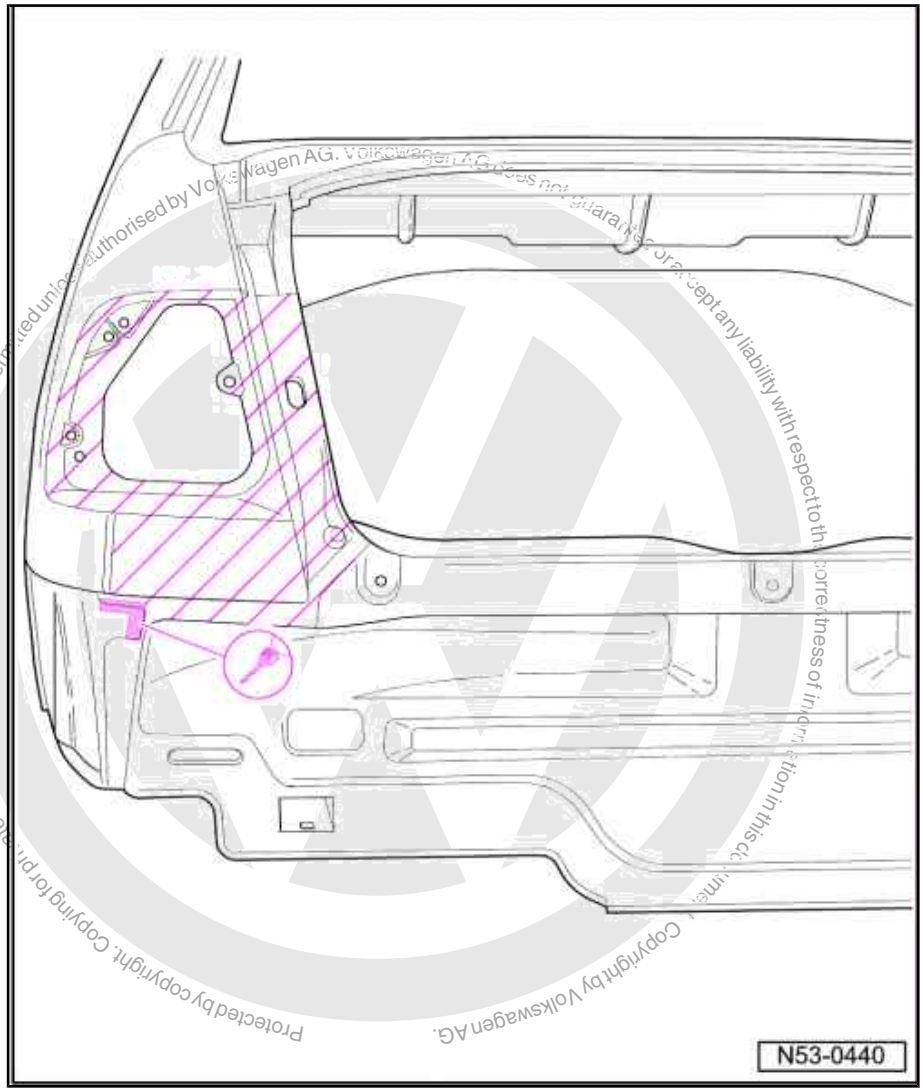

Protected by copyright. Copying for private or commercial purposes, in part or in whole, is not permitted unless authorised by Volkswagen AG. Volkswagen AG does not guarantee or accept any liability with respect to the correctness of information in this document. Copyright by Volkswagen AG.
satelettronica

– Drill out spot welds.
– Drill out tail light mounting.
– Remove remaining material.

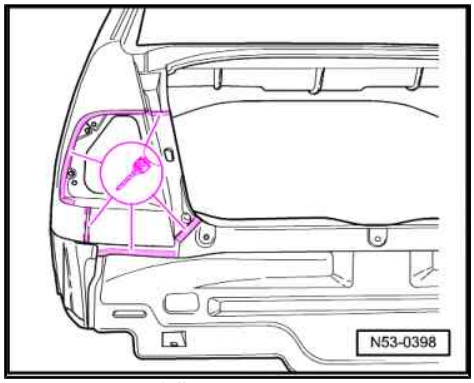

3.1.2 Replacement part

♦ Tail light mounting

3.1.3 Welding in

– Adapt new part to fit and hold in position.

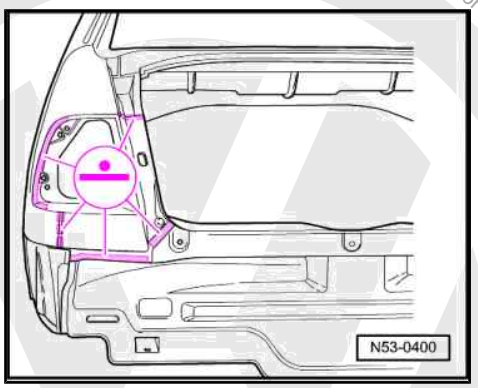

– Weld new part in, RP spot weld seam.
– Adapt side panel.
– Weld remaining joint, SG plug weld seam.

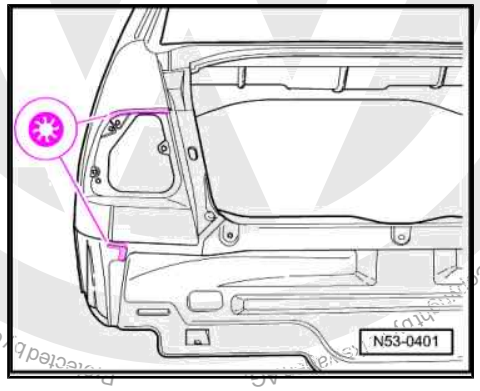

Protected by copyright. Copying for private or commercial purposes, in part or in whole, is not permitted unless authorised by Volkswagen AG. Volkswagen AG does not guarantee or accept any liability with respect to the correctness of information in this document. Copyright by Volkswagen AG.
satelitronica

RO: 53 10 55 60

4 Renewing tail light mounting (estate)

WARNING

Observe safety notes!

– ⇒ General Information; Body Repairs, General Body Repairs ; Chapter 1 - Safety notes

4.1 Removing

- Side panel already cut out.

4.1.1 Cutting locations

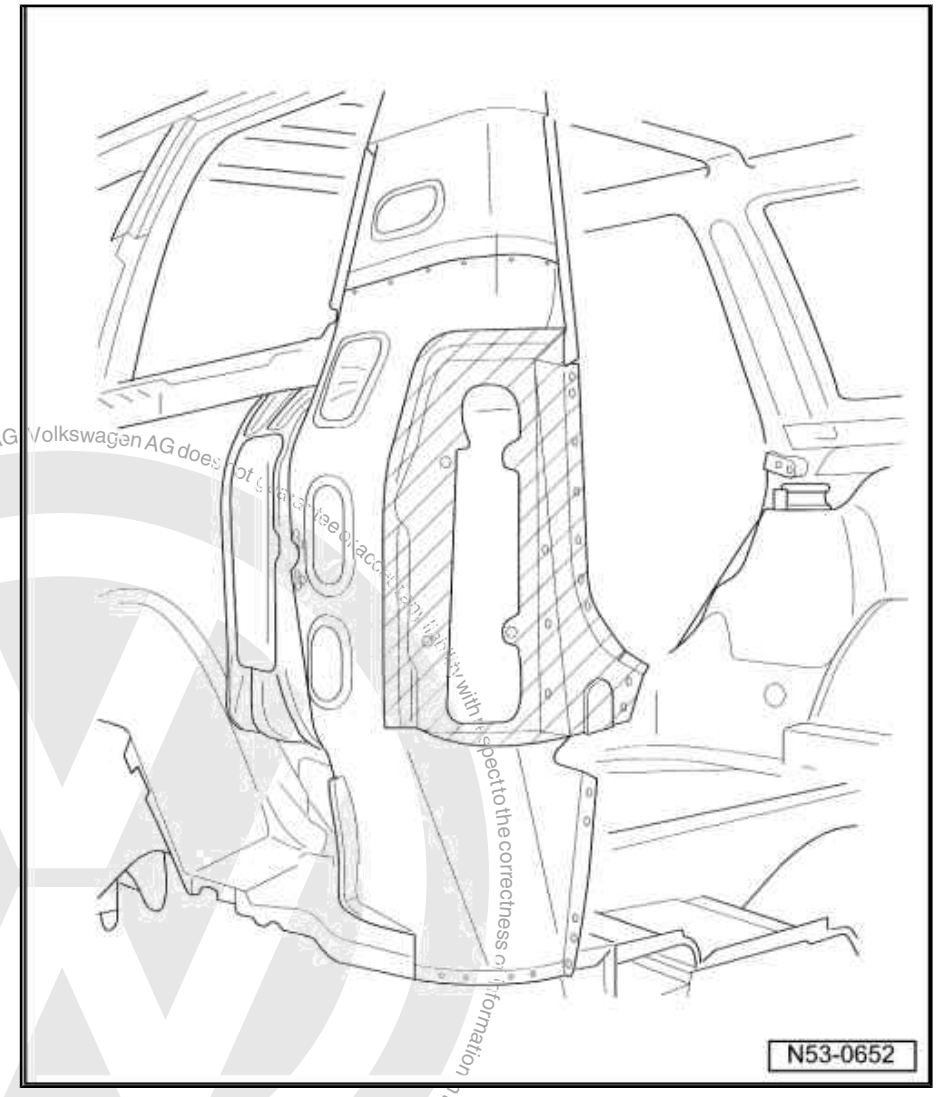

Protected by copyright. Copying for private or commercial purposes, in part or in whole, is not permitted unless authorised by Volkswagen AG. Volkswagen AG does not give any guarantee or assurance with respect to the correctness of information in this document. Copyright by Volkswagen AG.
satelettronica

– Drill out spot welds.
– Drill out tail light mounting.
– Remove remaining material.

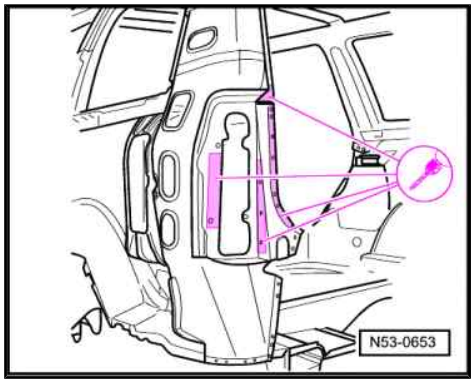

4.1.2 Replacement part

♦ Tail light mounting

Preparing new part

– Drill holes for SG plug weld seam.

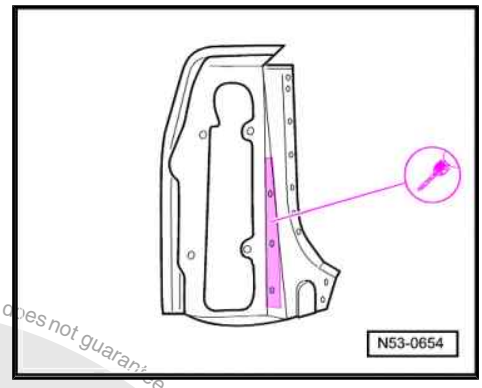

4.1.3 Welding in

– Adapt new part to fit and hold in position.

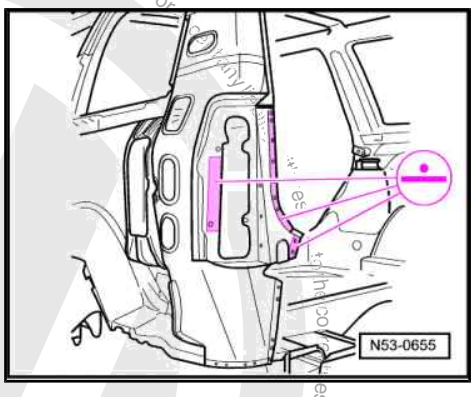

– Weld new part in, RP spot weld seam.
– Weld remaining joint, SG plug weld seam.

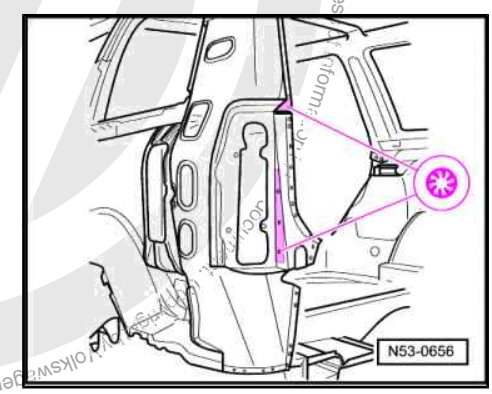

Protected by copyright. Copying for private or commercial purposes, in part or in whole, is not permitted unless authorised by Volkswagen AG. Volkswagen AG does not guarantee or
satelettronica

RO: 53 20 55 50

5 Renewing intermediate piece

WARNING

Observe safety notes!

– ⇒ General Information; Body Repairs, General Body Repairs ; Chapter 1 - Safety notes

5.1 Removing

Note

Bracket for tensioning strap -1- must be drilled out before removing intermediate piece.

5.1.1 Cutting locations

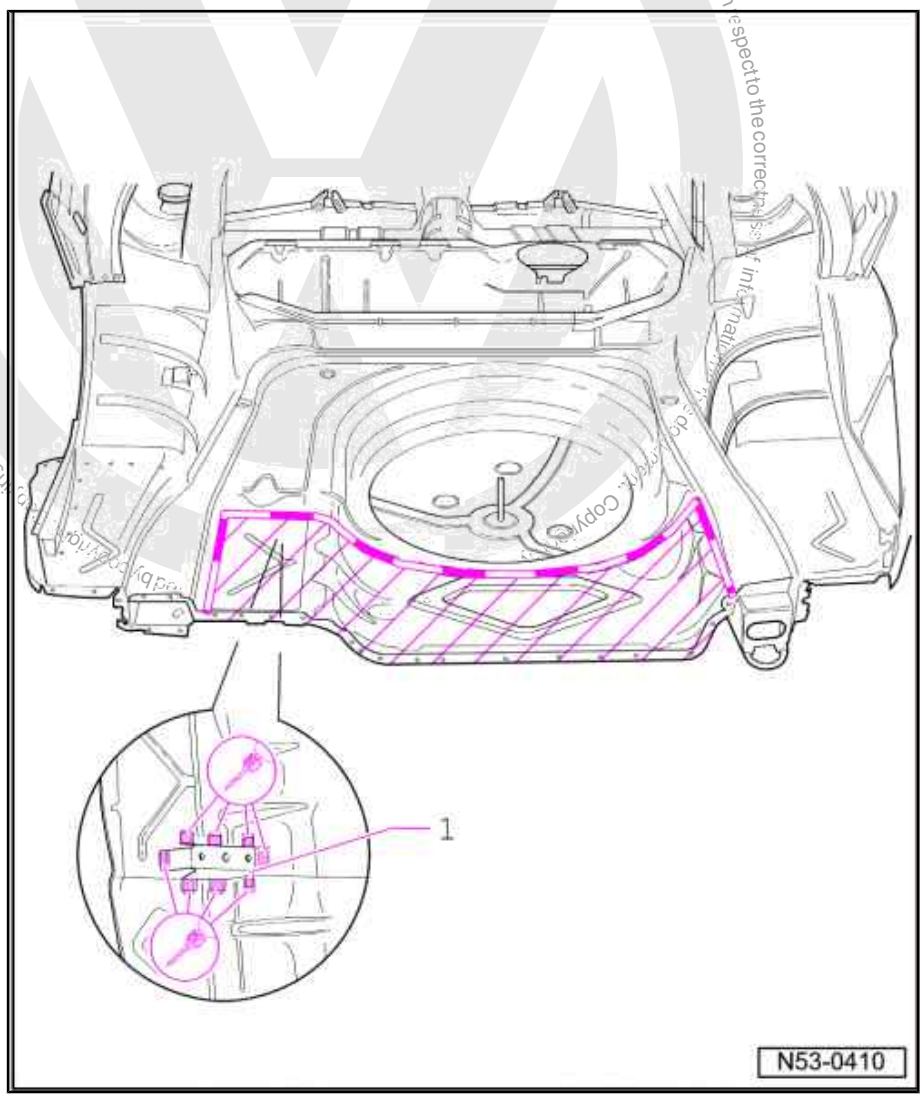

satelettronica

– Drill out bracket for tensioning strap -1- .
– Cut out intermediate piece.
– Drill out remaining joint.
– Remove remaining material.

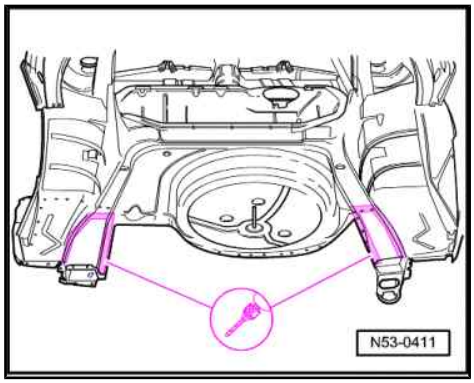

5.1.2 Replacement parts

- Intermediate piece
- Bracket for tensioning strap

Preparing new part

– Make holes in outer joint surface of new part.
– Drill 7 mm ∅ holes for SG plug weld seam.

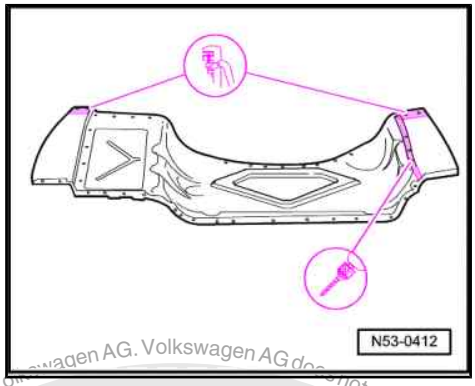

5.1.3 Welding in

– Adapt new part to fit and hold in position.

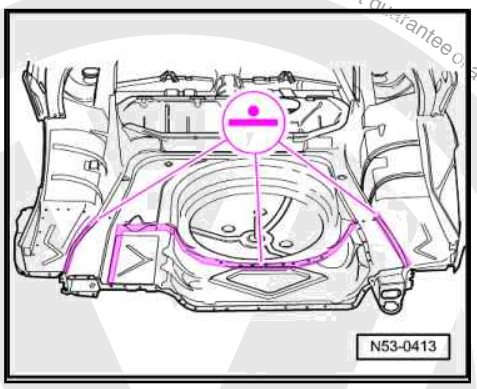

– Weld new part in, RP spot weld seam.

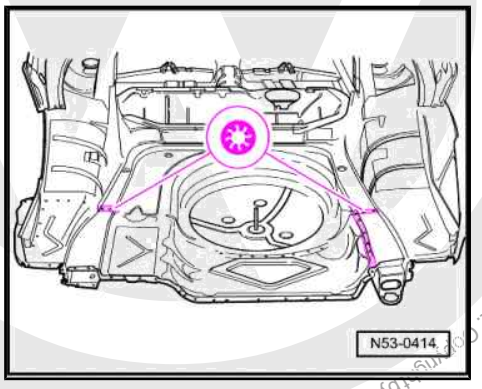

Protected by copyright. Copying for private or commercial purposes, in part or in whole, is not permitted unless authorised by Volkswagen AG. Volkswagen AG does not guarantee or accept any liability with respect to the correctness of information in this document. ©Copyright by Volkswagen AG.
satelettronica

– Weld remaining joint, SG plug weld seam.
– Weld in bracket for tensioning strap, SG plug weld seam.

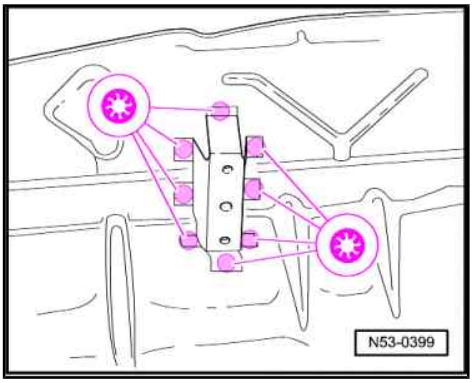

Protected by copyright. Copying for private or commercial purposes, in part or in whole, is not permitted unless authorised by Volkswagen AG. Volkswagen AG does not guarantee or accept any liability with respect to the correctness of information in this document. Copyright by Volkswagen AG.

satelettronica

RO: 53 20 55 60

6 Renewing intermediate piece (estate)

WARNING

Observe safety notes!

– ⇒ General Information; Body Repairs, General Body Repairs ; Chapter 1 - Safety notes

6.1 Includes: bracket for tensioning strap and cross member

Note

- *Bracket for tensioning strap -1- and outer cross member -2- must be drilled out before removing intermediate piece.*
- *Rear cross member must be drilled out before removing intermediate piece* ⇒ page 124 .

Protected by copyright. Copying for private or commercial purposes, in part or in whole, is not permitted unless authorised by Volkswagen AG. Volkswagen AG does not guarantee or accept any liability with respect to the correctness of information in this document. Copyright by Volkswagen AG.
satelettronica

6.1.1 Cutting locations

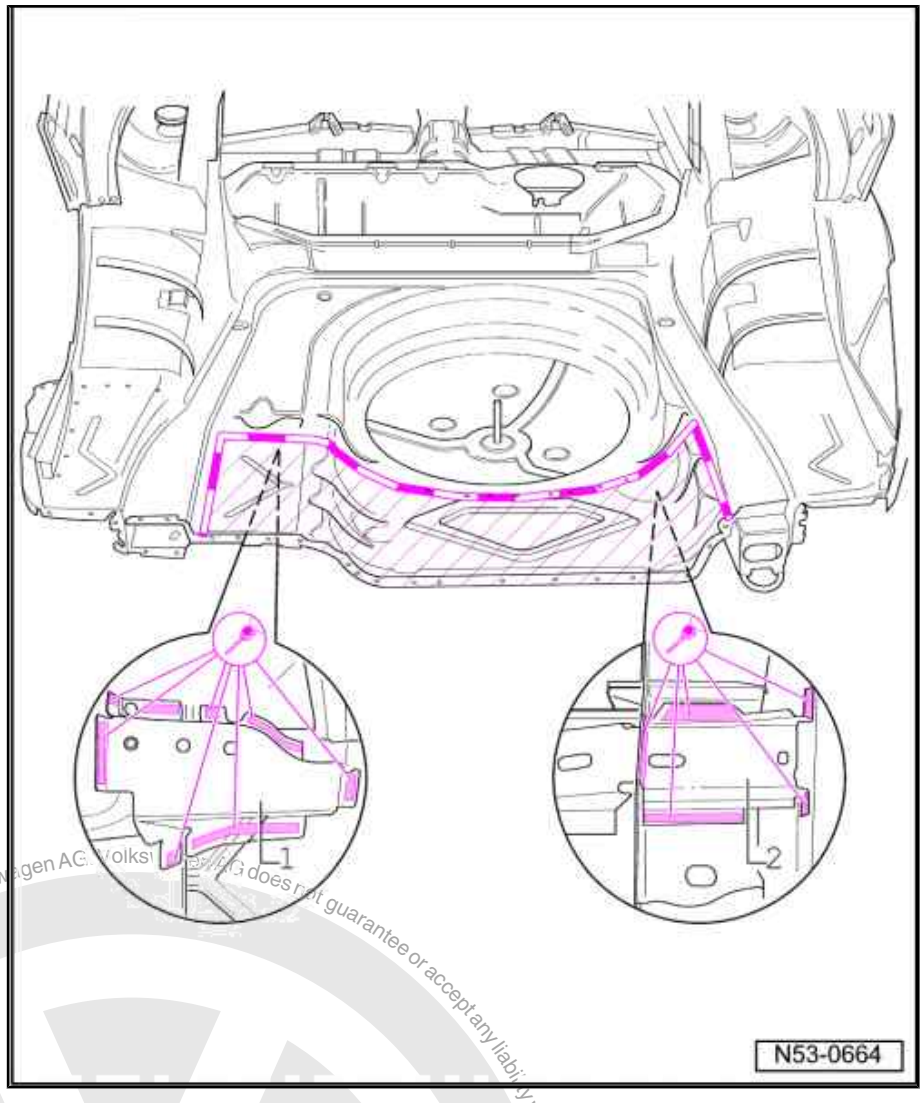

- Drill out bracket for tensioning strap -1- and outer cross member -2- and cut out intermediate piece.
- Drill out rear cross member ⇒ page 124 and cut out intermediate piece.
- Drill out remaining joint.
- Remove remaining material.

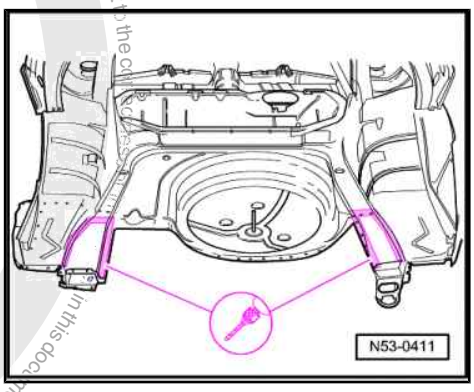

6.1.2 Replacement parts

- Intermediate piece
- Bracket for tensioning strap

satelettronica
Protected by copyright. Copying for private or commercial purposes, in part or in whole, is not permitted unless authorised by Volkswagen AG. Volkswagen AG does not guarantee or accept any liability with respect to the correctness of information in this document. Copyright by Volkswagen AG.

- Rear cross member
- Outer cross member.

Preparing new parts

– Make holes in outer joint surface of intermediate piece.

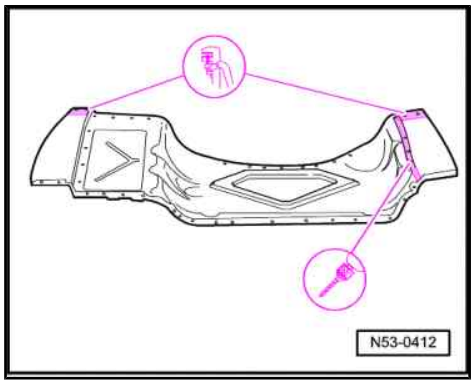

– Drill 7 mm ∅ holes for SG plug weld seam.
– Drill holes in bracket for tensioning strap -1- and outer joint surfaces of side cross member -2- .

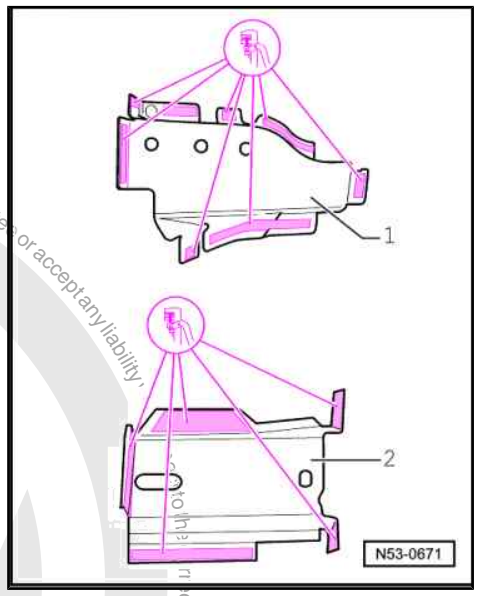

6.1.3 Welding in

– Adapt intermediate piece to fit and hold in position.

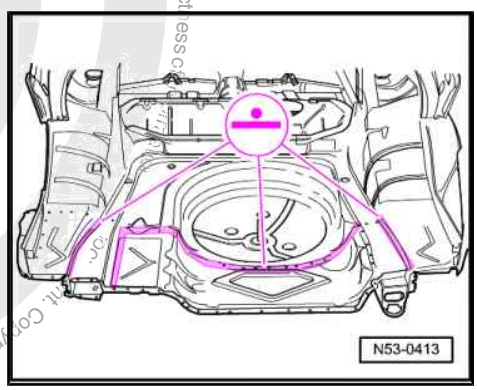

Protected by copyright. Copying for private or commercial purposes, in part or in whole, is not permitted unless authorised by Volkswagen AG. Volkswagen AG does not guarantee or accept any liability.
© Copyright by Volkswagen AG.
satelettronica

– Weld in intermediate piece, RP spot weld seam.

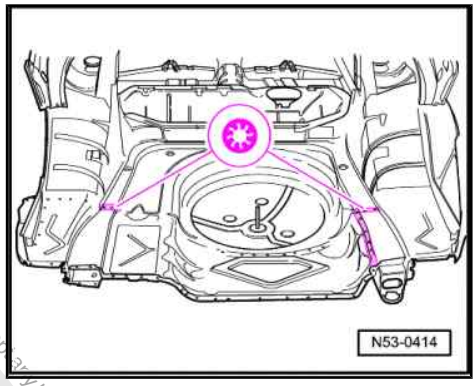

– Weld remaining joint, SG plug weld seam.

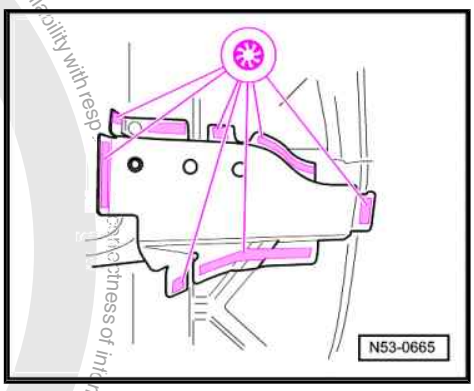

– Weld in bracket for tensioning strap, SG plug weld seam.
– Weld in outer cross member, SG plug weld seam.
– Weld in rear cross member ⇒ page 124 .

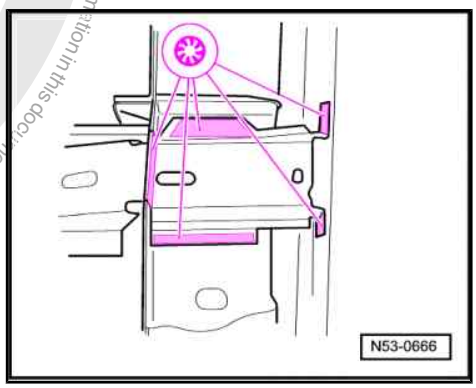

Protected by copyright. Copying for private or commercial purposes, in part or in whole, is not permitted unless authorised by Volkswagen AG. Volkswagen AG does not guarantee or accept any liability with respect to the correctness of information in this document. Copyright by Volkswagen AG.
satelettronica

RO: 53 24 55 50

7 Renewing luggage compartment floor, part section

WARNING

Observe safety notes!

– ⇒ General Information; Body Repairs, General Body Repairs ; Chapter 1 - Safety notes

7.1 Removing

Note

- *The replacement subpart is welded to the cross member.*
- *Renew 53 20 55 50 intermediate piece (work included)*

7.1.1 Cutting locations

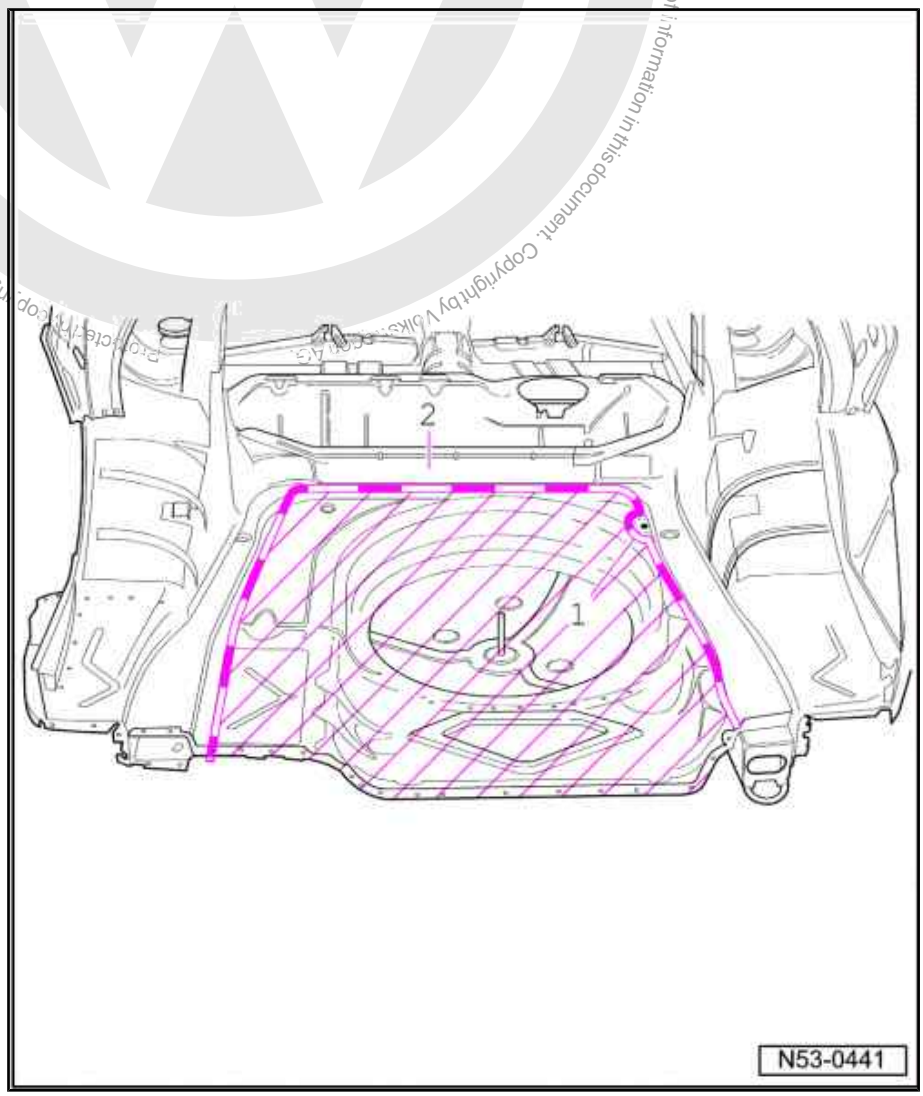

Copyright by Volkswagen AG. Volkswagen AG does not guarantee or accept any liability with respect to the correctness of information in this document. Copyright by Volkswagen AG. Protected by copyright. Copying for private or commercial purposes, in part or in whole, is not permitted unless authorised by Volkswagen AG.
satelettronica

- Drill out panel tabs -1- from below.
- Position separating cut for cross member -2- .
- Drill out remaining joint.
- Remove remaining material.

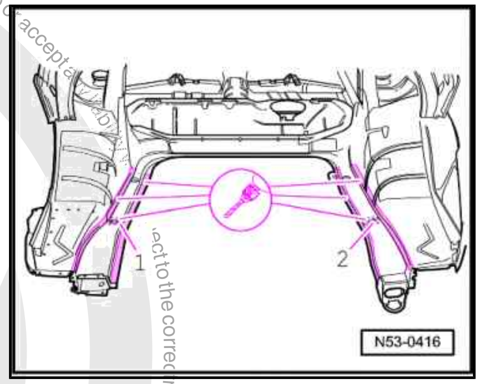

Note

Note internal reinforcing -1- and -2- !

7.1.2 Replacement parts

- ♦ Luggage compartment floor
- ♦ Bracket for spare wheel
- ♦ Bracket for tensioning strap
- ♦ Intermediate piece

Preparing new parts

- Measure and mark out separating cut, in the process remember the overlap weld to the cross member.
- Drill holes for SG plug weld seam.

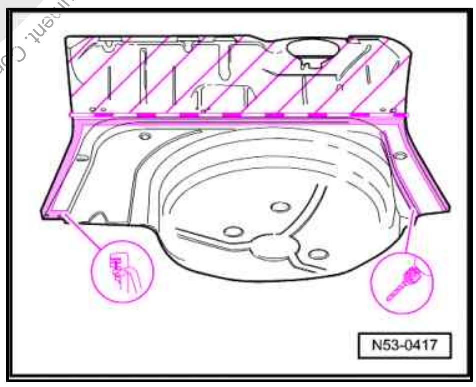

7.1.3 Welding in

- Adapt luggage compartment floor to fit and check gaps/shut lines to attached parts, with vehicle stress free.

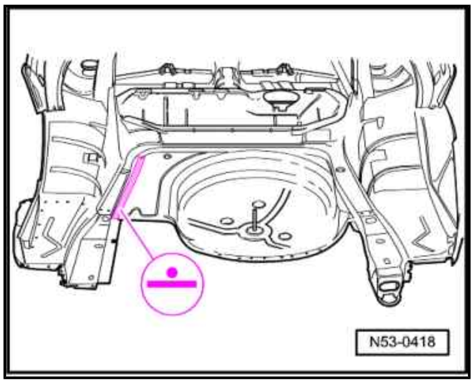

- Weld in luggage compartment floor, RP spot weld seam.
- Weld in luggage compartment floor, SG plug weld seam.
- Weld in panel tabs -1- from below, SG plug weld seam.

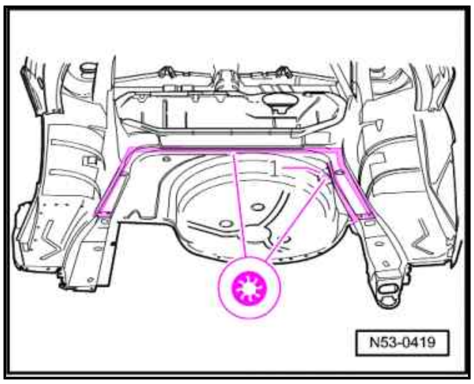

Note

The distance between the SG plug welds on the cross member must not be greater than the distance between the original factory produced weld points.

Protected by copyright. Copying for private or commercial purposes, in part or in whole, is not permitted unless authorised by Volkswagen AG. Volkswagen AG does not guarantee or accept any liability with respect to the correctness of information in this document. Copyright by Volkswagen AG.
sateletronica

- Spot weld bracket for spare wheel, RP spot weld seam.
- Weld in intermediate piece and bracket for tensioning strap ⇒ page 90 .
- Weld in intermediate piece and bracket for tensioning strap (estate) ⇒ page 94 .

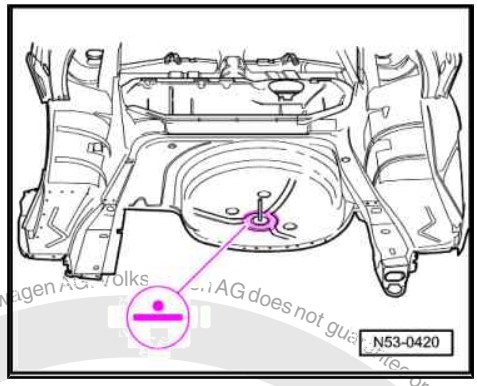

Protected by copyright. Copying for private or commercial purposes, in part or in whole, is not permitted unless authorised by Volkswagen AG. Volkswagen AG does not guarantee or accept any liability with respect to the correctness of information in this document. Copyright by Volkswagen AG.
satelettronica

RO: 53 40 55 60

8 Renewing web plate (estate)

WARNING

Observe safety notes!

– ⇒ General Information; Body Repairs, General Body Repairs ; Chapter 1 - Safety notes

8.1 Includes: cross member

- Side panel already cut out.

8.1.1 Cutting locations

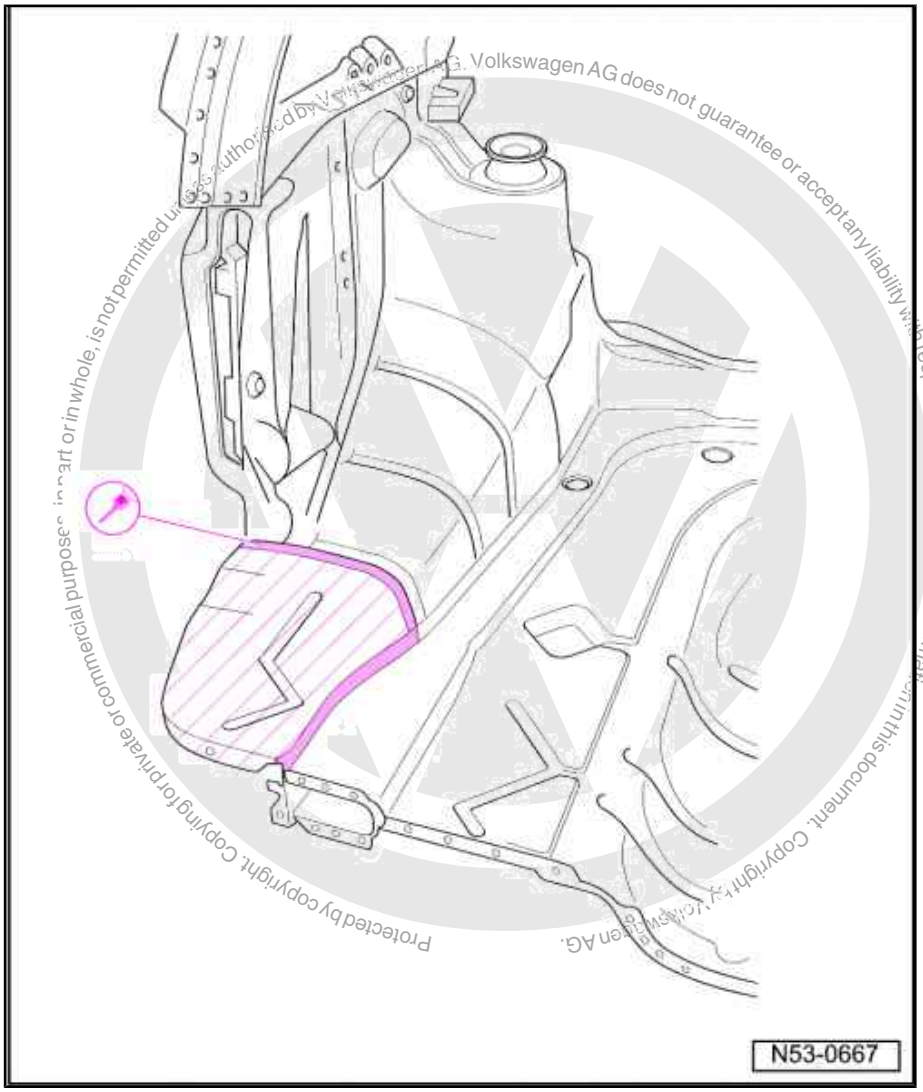

– Separate original joint.

– Remove remaining material.

satelettronica

8.1.2 Replacement parts

- Web plate
- Cross member

8.1.3 Welding in

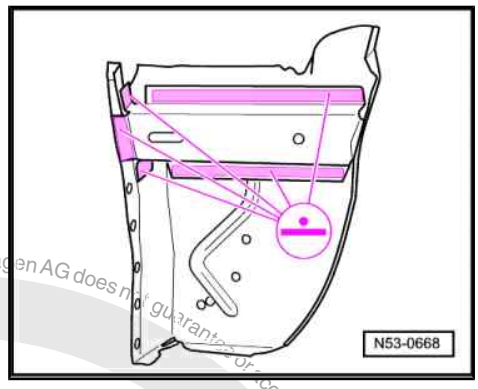

- Attach cross member, RP spot weld seam.
- Adapt web plate to fit and hold in position.

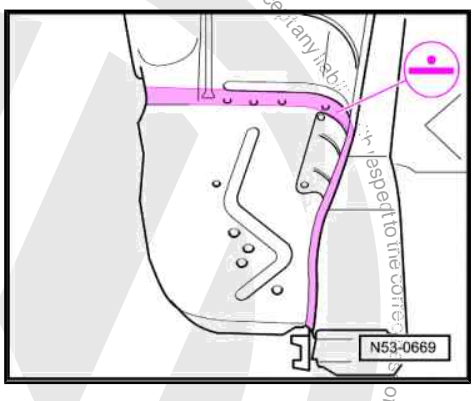

- Weld in web plate, RP spot weld seam.
- Weld in remaining joint from outside, SG plug weld seam.

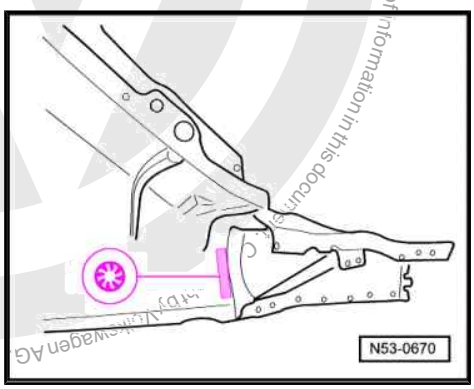

Protected by copyright. Copying for private or commercial purposes, in part or in whole, is not permitted unless authorised by Volkswagen AG. Volkswagen AG does not guarantee or accept any liability with respect to the correctness of information in this document. Copyright by Volkswagen AG

satelettronica

RO: 53 47 55 50

9 Renewing rear longitudinal member - partial renewal

WARNING

Observe safety notes!

– ⇒ General Information; Body Repairs, General Body Repairs ; Chapter 1 - Safety notes

9.1 Removing

Note

Due to internal reinforcements, parting cut -1- is permissible only at this location!

9.1.1 Cutting locations

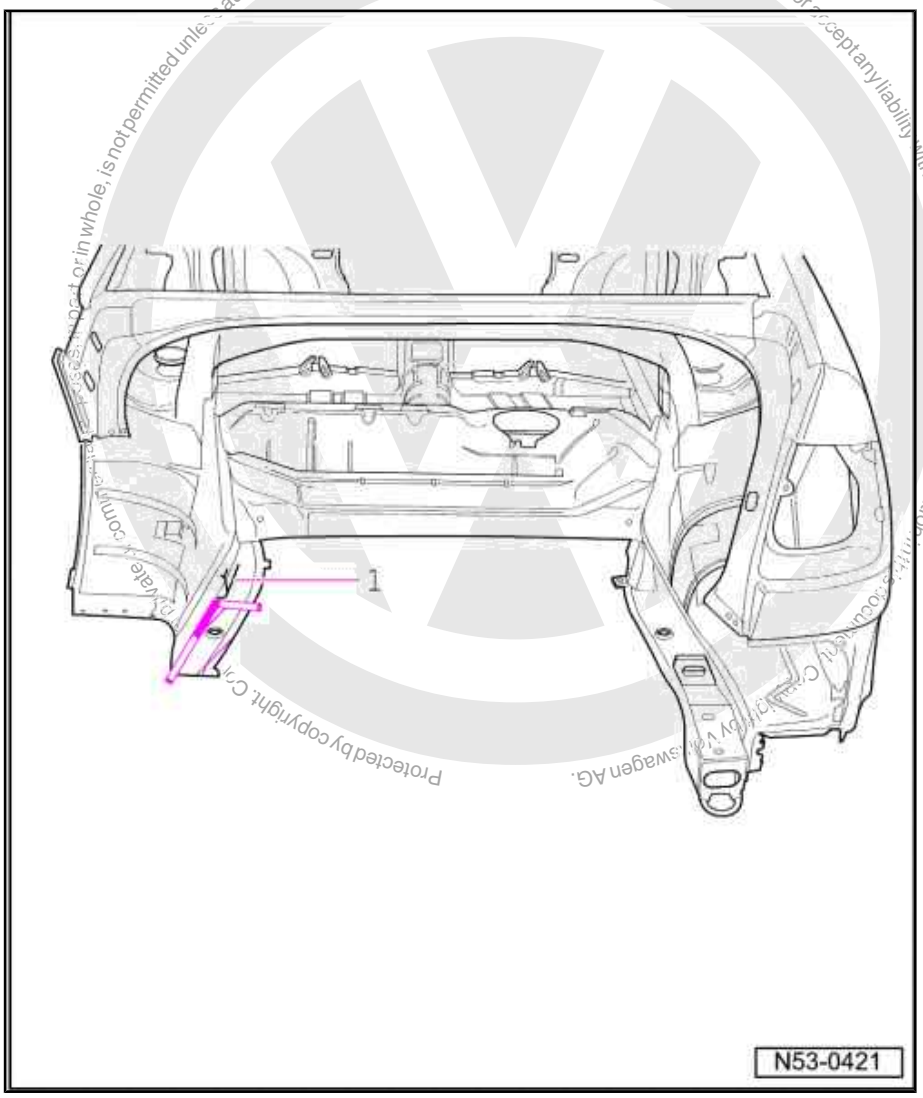

satelettronica

– Remove remaining material.

9.1.2 Replacement part

♦ Longitudinal member

Preparing new part

– Transfer separating cut to longitudinal member and cut off hatched section.

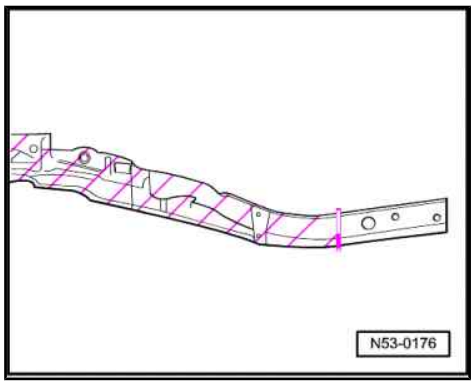

9.1.3 Welding in

– Secure longitudinal member on alignment bracket.

– Weld in longitudinal member to wheel housing, RP spot weld seam.

– Weld parting cut, SG continuous weld seam.

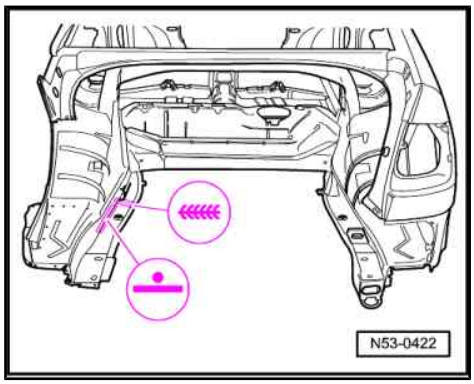

Protected by copyright. Copying for private or commercial purposes, in part or in whole, is not permitted unless authorised by Volkswagen AG. Volkswagen AG does not guarantee or accept any liability with respect to the correctness of information in this document. Copyright by Volkswagen AG.

satelettronica

Protected by copyright. Copying for private or commercial purposes, in part or in whole, is not permitted unless authorised by Volkswagen AG. Volkswagen AG does not guarantee or accept any liability with respect to the correctness of information in this document. Copyright

RO: 53 48 55 50

10 Renewing rear longitudinal member

WARNING

Observe safety notes!

– ⇒ General Information; Body Repairs, General Body Repairs ; Chapter 1 - Safety notes

10.1 Includes: web plate

10.1.1 Cutting locations

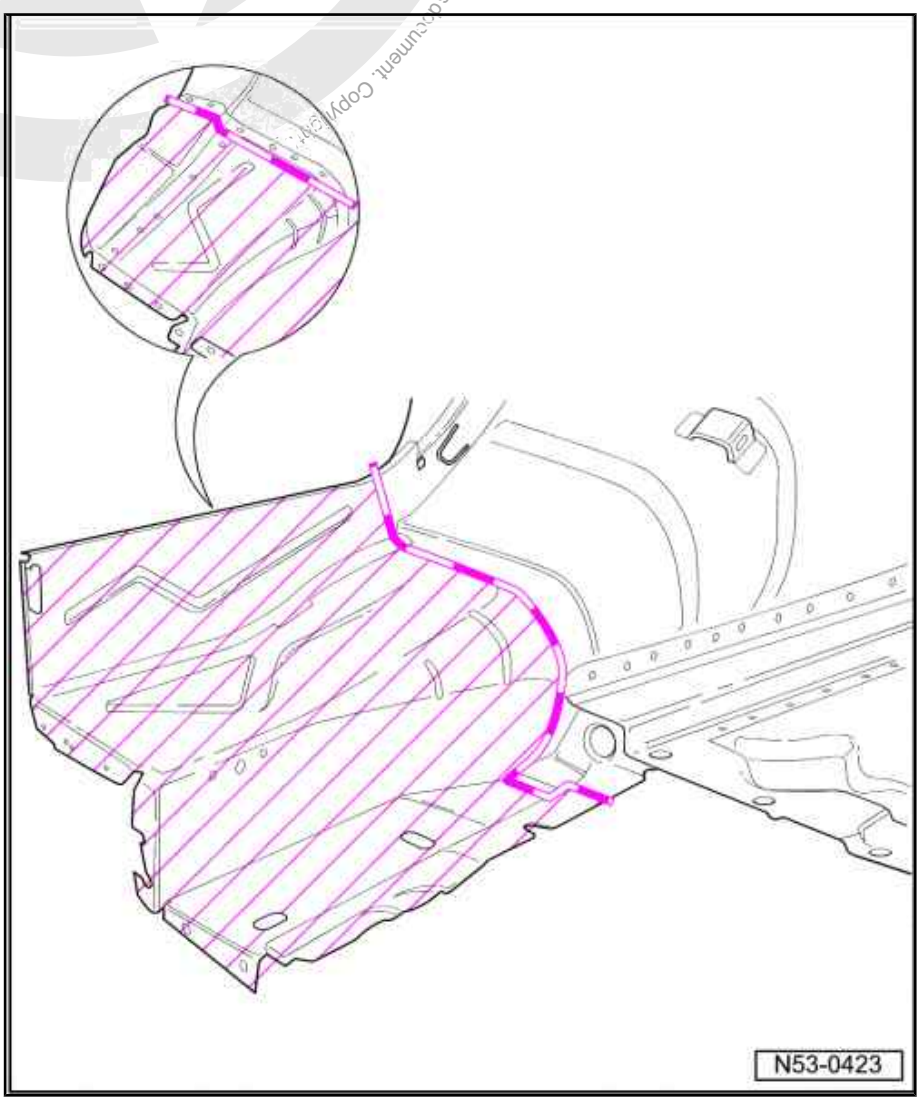

satelettronica

– Cut out longitudinal member and web plate.
– Drill out remaining joint.
– Remove remaining material.

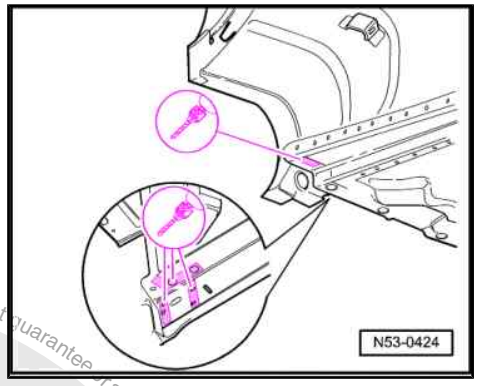

10.1.2 Replacement parts

- Rear longitudinal member
- Web plate

10.1.3 Welding in

– Check exactness of fit with attached parts and hold in position.

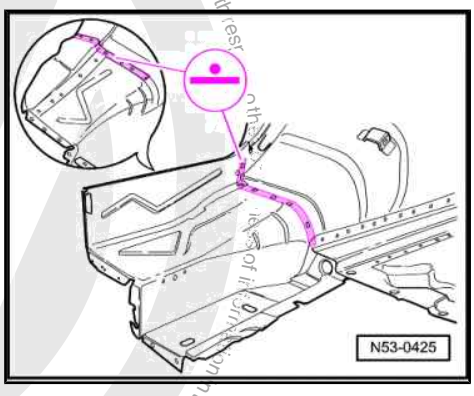

– Weld in new part, RP spot weld seam.

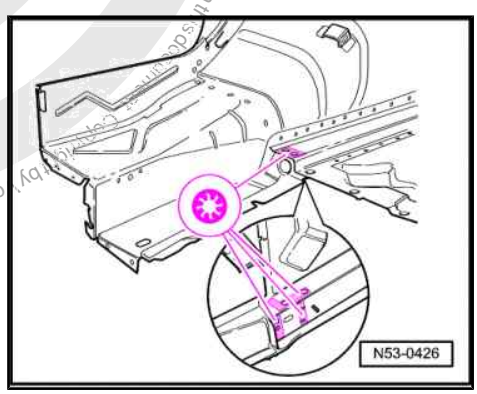

– Weld in longitudinal member, SG plug weld seam.
– Weld joint (rear longitudinal member to web plate), RP spot weld seam.

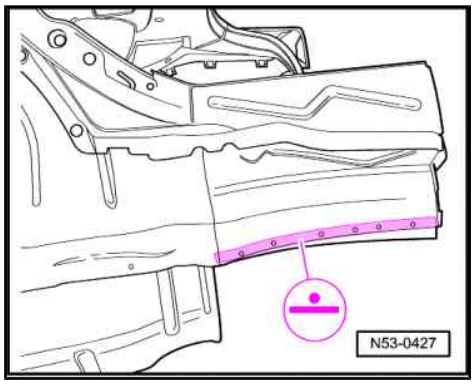

Protected by copyright. Copying for private or commercial purposes, in part or in whole, is not permitted unless authorised by Volkswagen AG. Volkswagen AG does not guarantee or accept any liability with respect to the correctness of information in this document. Copyright by Volkswagen AG.
satelettronica

RO: 53 55 55 00

11 Renewing side panel

WARNING

Observe safety notes!

– ⇒ General Information; Body Repairs, General Body Repairs ; Chapter 1 - Safety notes

11.1 Removing

11.1.1 Cutting locations

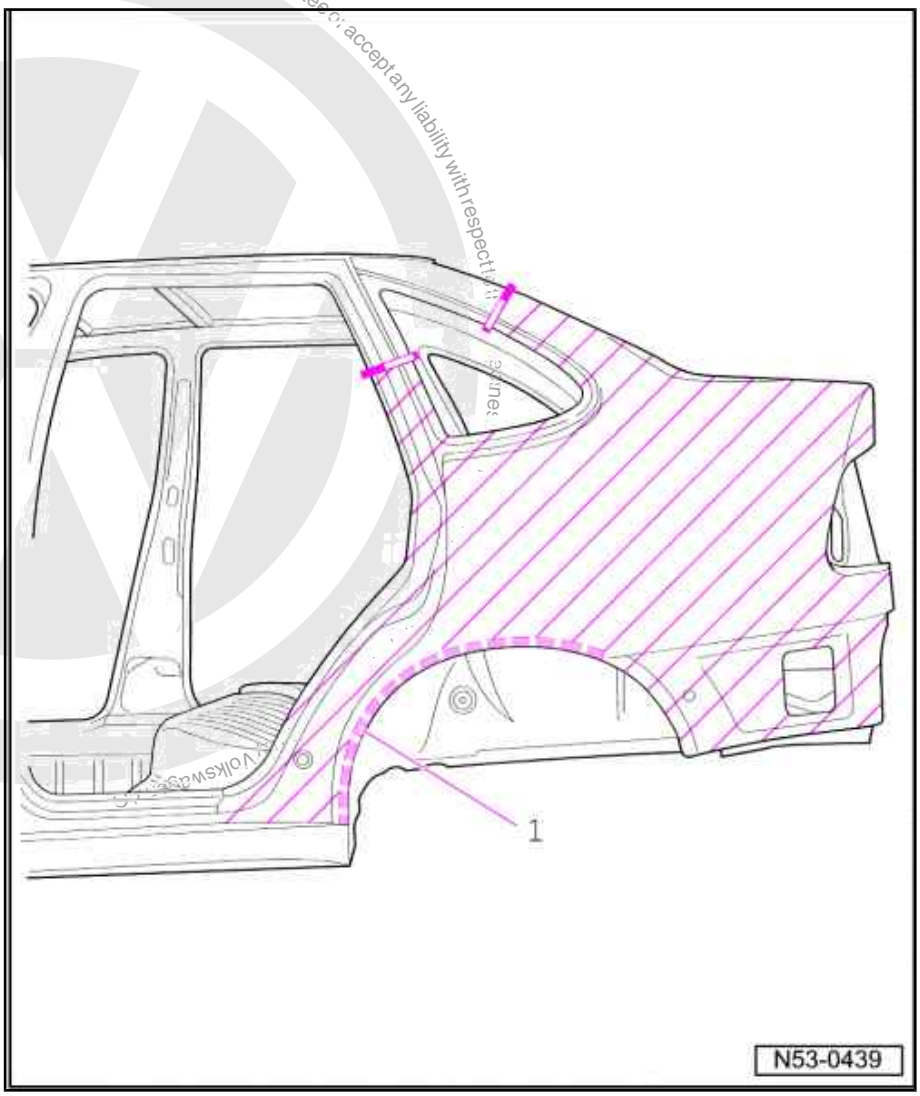

– Open wheel housing flange -1- .
– Make parting cut on C and D-pillar according to degree of damage.

Protected by copyright. Copying for private or commercial purposes, in part or in whole, is not permitted unless authorised by Volkswagen AG. Volkswagen AG does not guarantee or accept any liability with respect to the
satelettronica

– Cut out side panel.
– Remove remaining material.

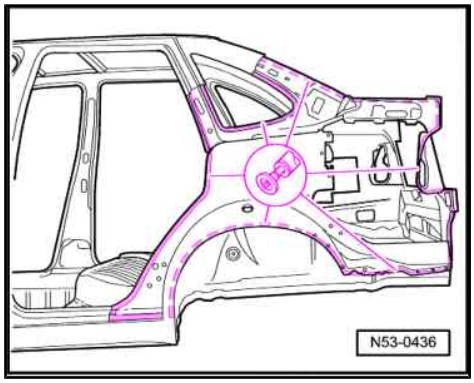

11.1.2 Replacement part

♦ Side panel

Preparing new part

– Transfer parting cut to new part and remove hatched area.
– Make holes in outer joint surface of new part.

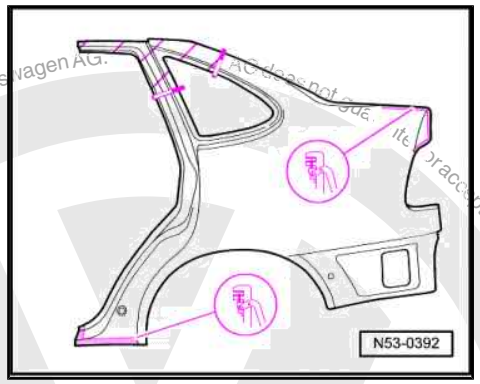

11.1.3 Welding in

– Adapt side panel to fit, hold in position and check gaps/shut lines with vehicle stress free.

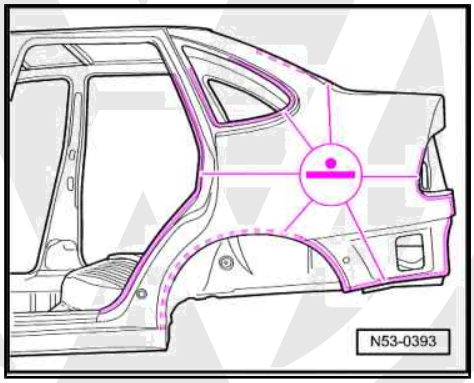

– Weld in side panel, RP spot weld seam.
– Weld in side panel, SG plug weld seam.

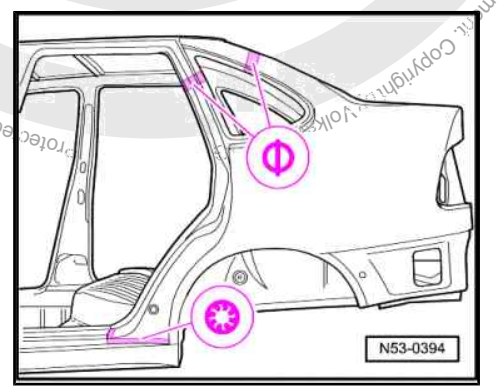

satelettronica

– Weld parting cut, SG step weld seam.

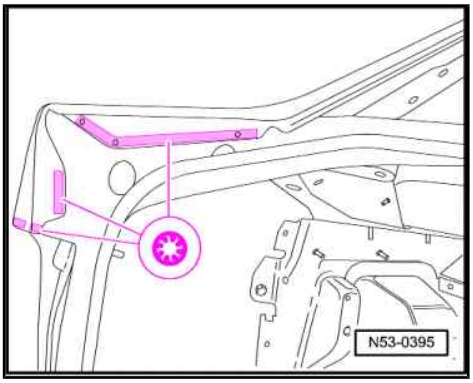

– Weld remaining joint, SG plug weld seam.
– Reform wheel housing flange -1- .

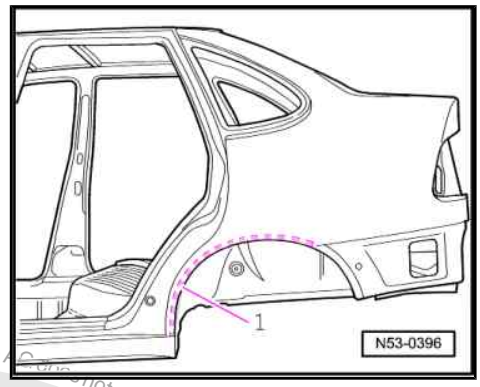

Protected by copyright. Copying for private or commercial purposes, in part or in whole, is not permitted unless authorised by Volkswagen AG. Volkswagen AG does not guarantee or accept any liability with respect to the correctness of information in this document. Copyright by Volkswagen AG.
satelettronica

RO: 53 55 55 10

12 Renewing side panel (estate)

WARNING

Observe safety notes!

– ⇒ General Information; Body Repairs, General Body Repairs ; Chapter 1 - Safety notes

12.1 Removing

12.1.1 Cutting locations

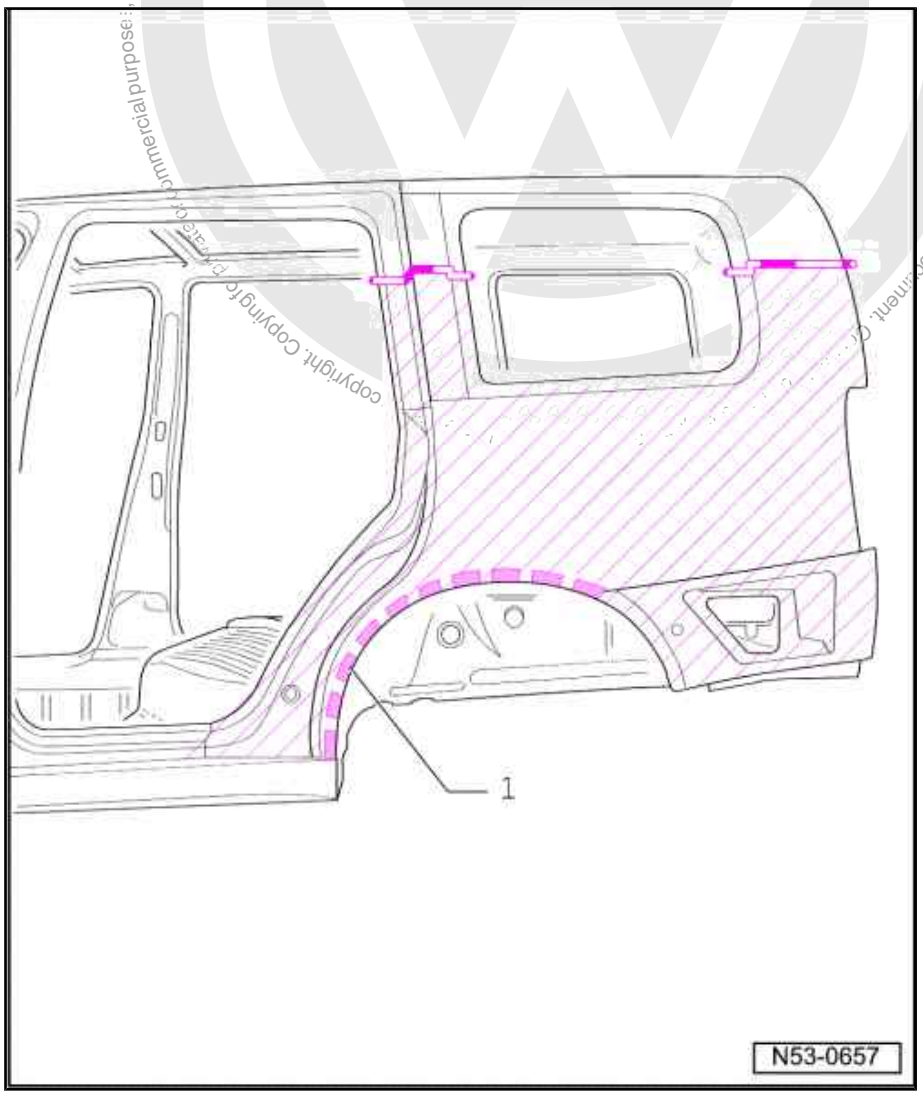

– Open wheel housing flange -1- .
– Make parting cut on C and D-pillar according to degree of damage.

Copyright. Copying for private or commercial purposes, in part or in whole, is not permitted unless authorised by Volkswagen AG. Volkswagen AG does not guarantee or accept any liability with respect to the correctness of information in this document.
satelettronica

– Cut out side panel.
– Remove remaining material.

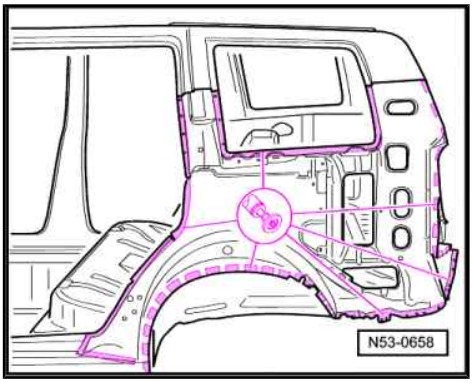

12.1.2 Replacement part

♦ Side panel

Preparing new part

– Transfer parting cut to new part and remove hatched area.
– Make holes in outer joint surface of new part.

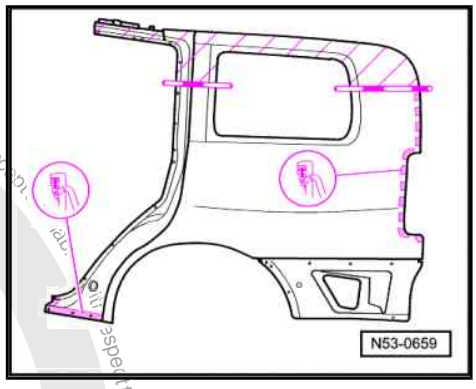

12.1.3 Welding in

– Adapt side panel to fit, hold in position and check gaps/shut lines with vehicle stress free.

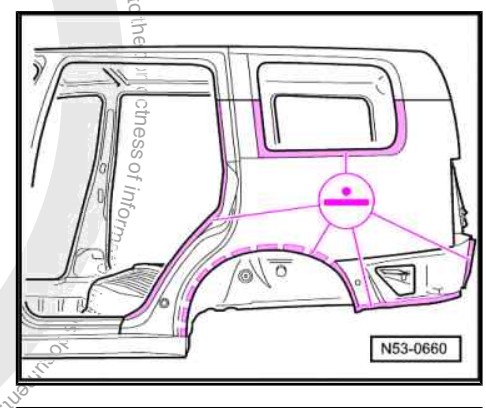

– Weld in side panel, RP spot weld seam.
– Weld in side panel, SG plug weld seam.

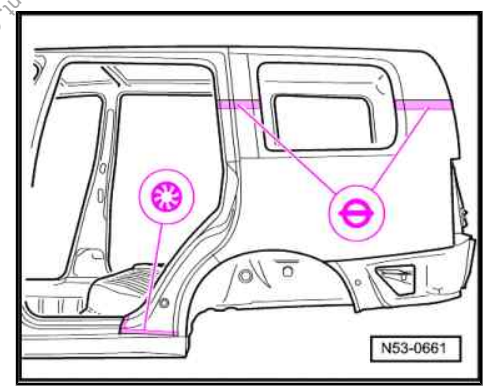

Protected by copyright. Copying for private or commercial purposes, in part or in whole, is not permitted unless authorised by Volkswagen AG. Volkswagen AG does not guarantee or accept any liability with respect to the correctness of information in this document. Copyright by Volkswagen AG.
satelettronica

– Weld parting cut, SG step weld seam.

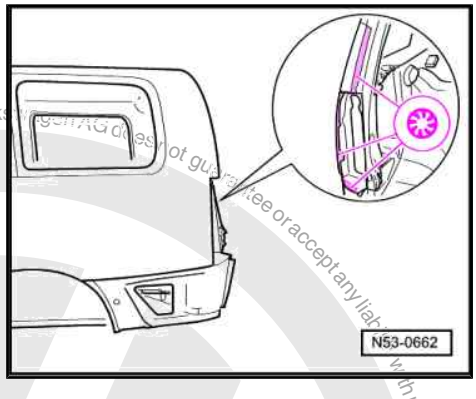

– Weld remaining joint, SG plug weld seam.
– Reform wheel housing flange -1- .

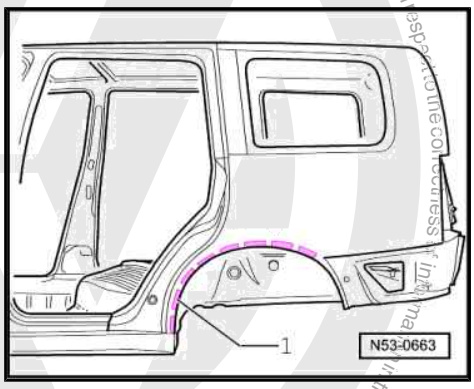

Protected by copyright. Copying for private or commercial purposes, in part or in whole, is not permitted unless authorised by Volkswagen AG. Volkswagen AG does not guarantee or accept any liability with respect to the correctness of information in this document. Copyright by Volkswagen AG.
satelettronica

RO: 53 68 55 50

13 Renewing rear wheel housing

WARNING

Observe safety notes!

– ⇒ General Information; Body Repairs, General Body Repairs ; Chapter 1 - Safety notes

13.1 Removing

13.1.1 Cutting locations

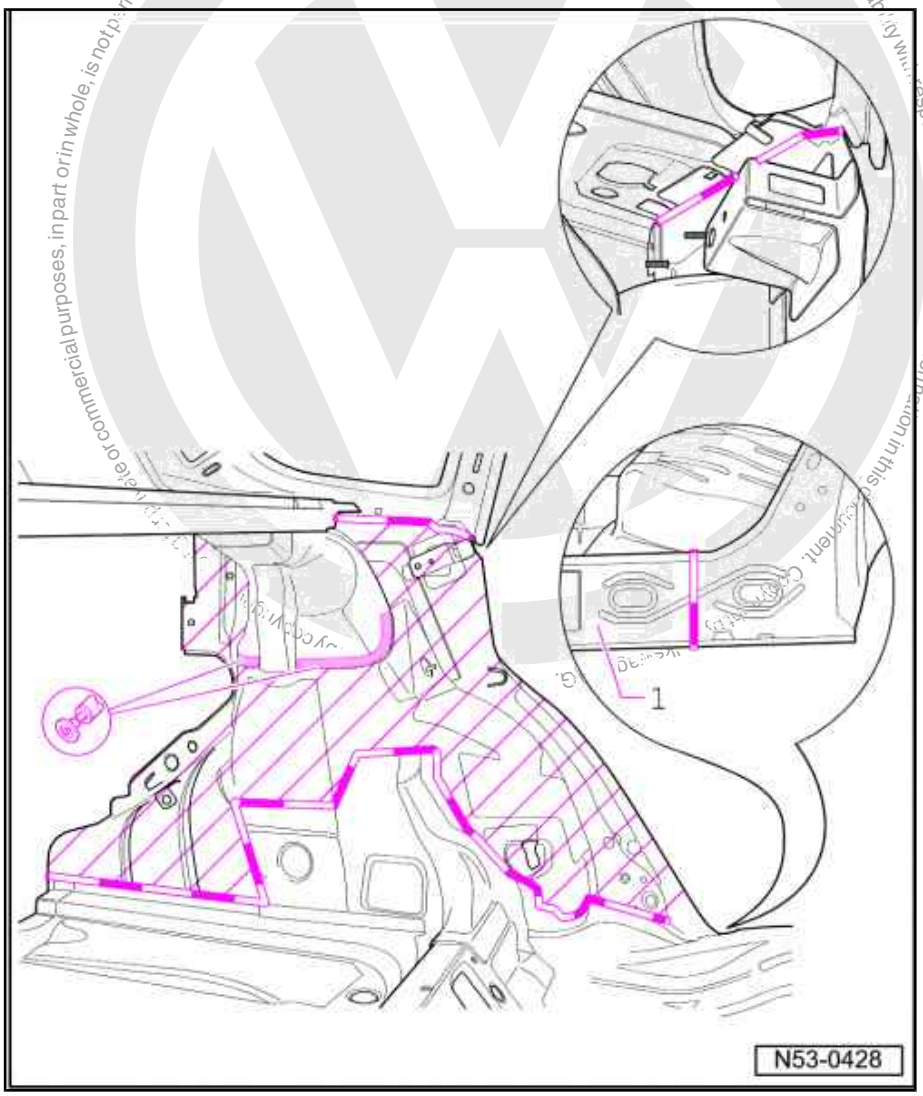

– Separate cross member bracket from wheel housing.
– Separate carrier panel -1- vertically.

satelettronica

– Cut out wheel housing.
– Drill out remaining joint.
– Remove remaining material.

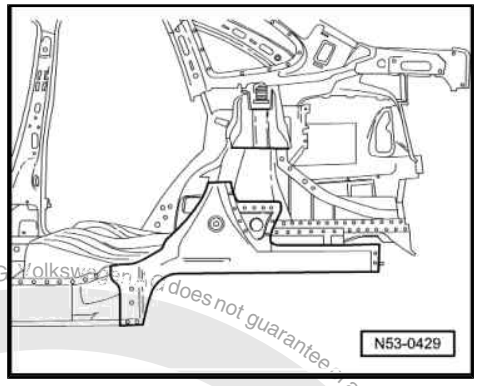

13.1.2 Replacement part

♦ Wheel housing

Preparing new part

– Transfer parting cut to new part and remove hatched area.

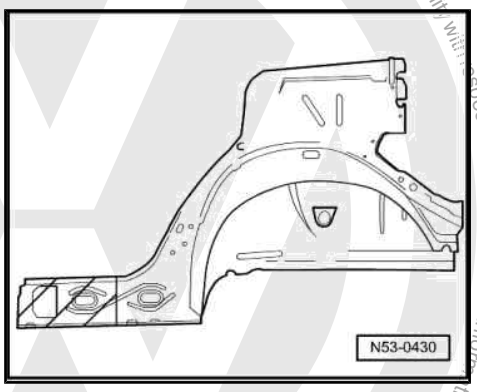

13.1.3 Welding in

– Secure wheel housing on alignment bracket.
– Mark position of holes for SG plug weld seam.
– Remove wheel housing.

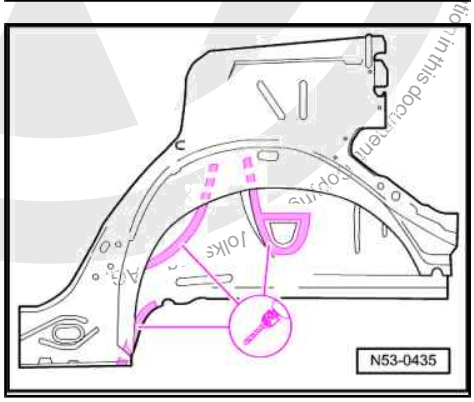

– Drill 7 mm ∅ holes for SG plug weld seam.
– Secure wheel housing on alignment bracket.
– Check exactness of fit with attached parts.

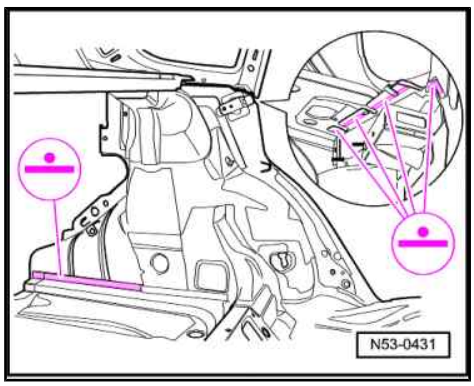

Protected by copyright. Copying for private or commercial purposes, in part or in whole is not permitted unless authorised by Volkswagen AG. Volkswagen AG does not guarantee or accept any liability with respect to the correctness of information in this document.
satelettronica

– Spot weld wheel housing, RP spot weld seam.

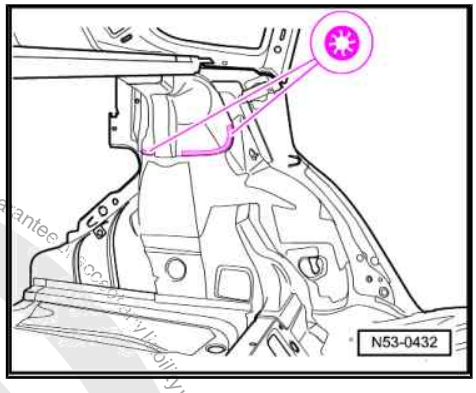

– Weld in bracket for cross member, SG plug weld seam.

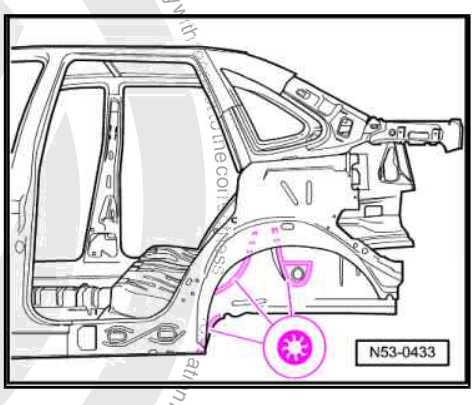

– Weld in wheel housing, SG plug weld seam.
– Spot weld wheel housing, RP spot weld seam.
– Weld parting cut, SG step weld seam.

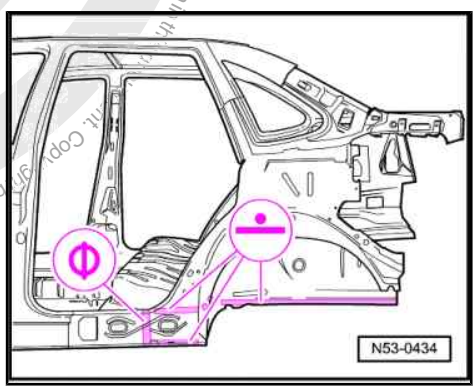

Protected by copyright. Copying for private or commercial purposes, in part or in whole, is not permitted unless authorised by Volkswagen AG. Volkswagen AG does not guarantee the correctness of this copy with the original.

satelettronica

RO: 53 68 55 60

14 Renewing rear wheel housing (estate)

WARNING

Observe safety notes!

– ⇒ General Information; Body Repairs, General Body Repairs ; Chapter 1 - Safety notes

14.1 Removing

- Rear cross member and mounting panel already removed.

14.1.1 Cutting locations

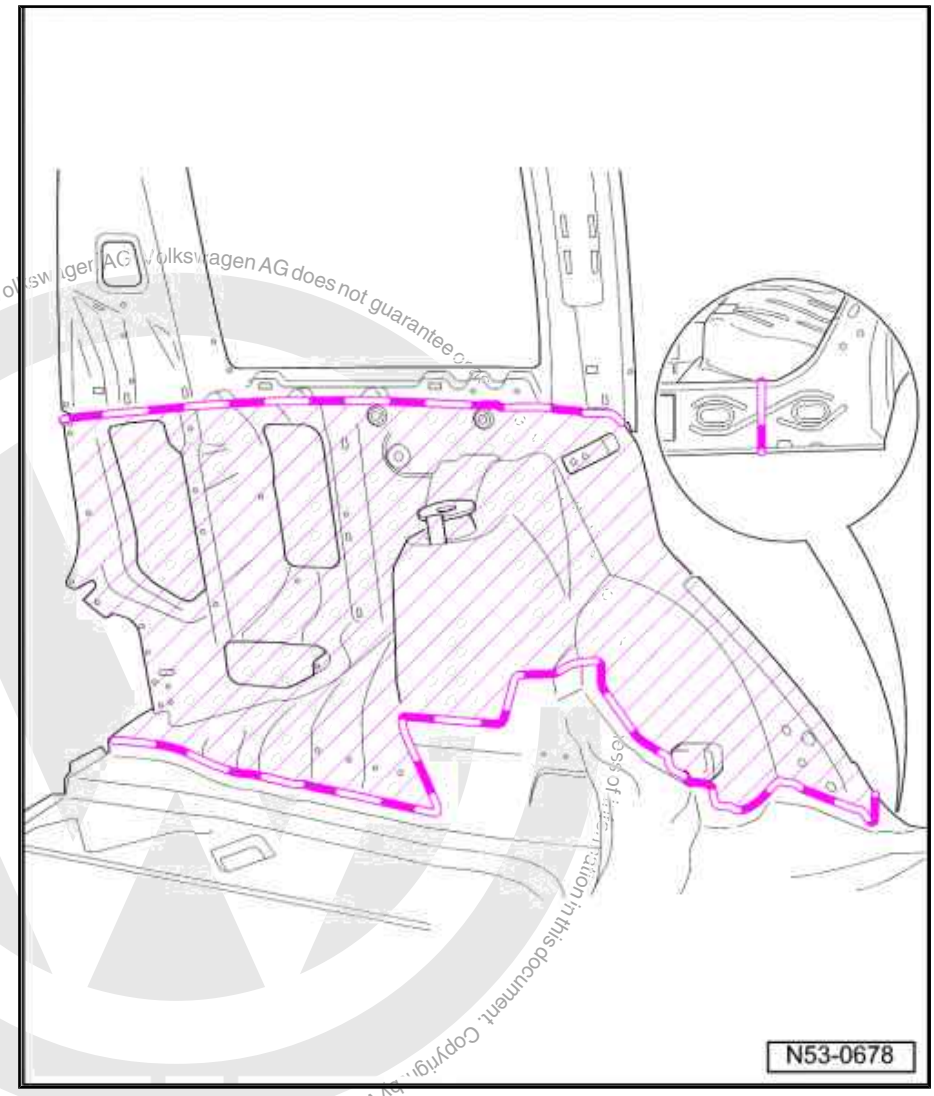

Protected by copyright. Copyright by Volkswagen AG.
Volkswagen AG does not guarantee or assume any liability for the information in this document. Copying for private or commercial purposes, in part or in whole, is not permitted unless authorised by Volkswagen AG.

– Separate carrier panel vertically vertically-enlargement-.

satelettronica

– Cut out wheel housing.
– Drill out remaining joint.
– Remove remaining material.

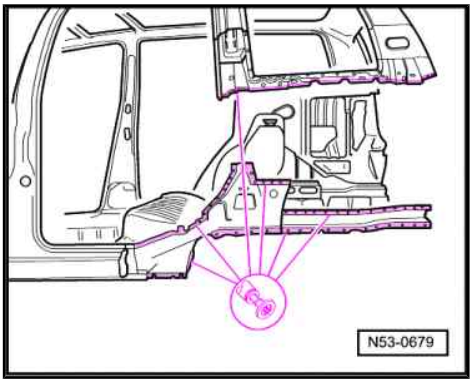

14.1.2 Replacement parts

- Wheel housing
- Wheel housing liner
- Carrier panel

Preparing new parts

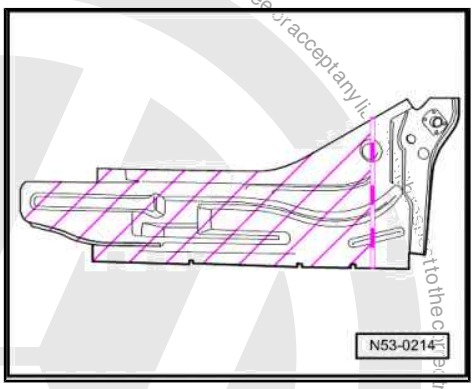

– Transfer parting cut to new part and remove hatched area.
– Secure wheel housing on alignment bracket.
– Mark position of holes for SG plug weld seam.
– Remove wheel housing.
– Drill 7 mm ∅ holes for SG plug weld seam.

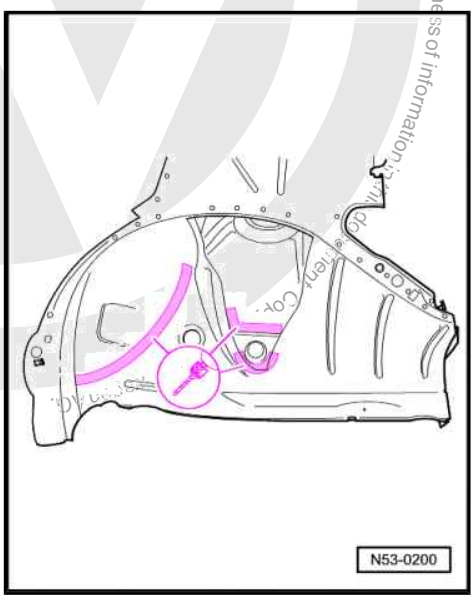

Protected by copyright. Copying for private or commercial purposes, in part or in whole, is not permitted unless authorised by Volkswagen AG. Volkswagen AG does not guarantee or accept any liability with respect to the correctness of information.
satelettronica

Protected by copyright. Copying for private or commercial purposes, in part or in whole, is not permitted unless authorised by Volkswagen AG. Volkswagen AG does not guarantee or accept any liability with respect to the correctness of information in this document. Copyright by Volkswagen AG.

14.1.3 Welding in

– Secure wheel housing on alignment bracket.
– Check exactness of fit with attached parts.

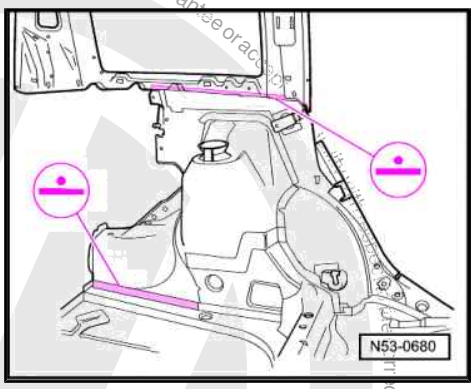

– Spot weld wheel housing, RP spot weld seam.

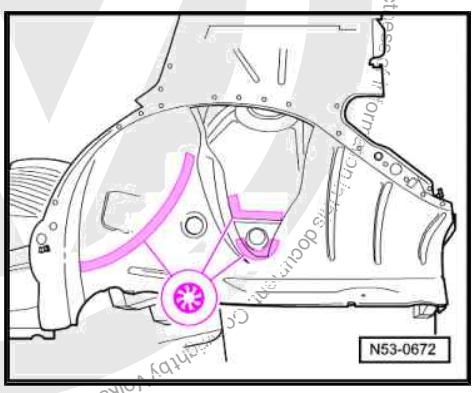

– Weld in wheel housing, SG plug weld seam.

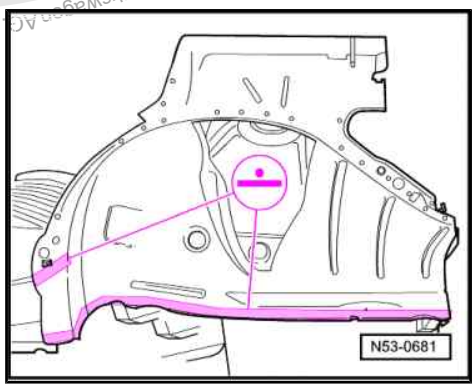

– Spot weld wheel housing, RP spot weld seam.
– Adapt wheel housing liner to fit, with side panel fitted and vehicle stress free, check gaps/shut lines.
– Remove side panel.

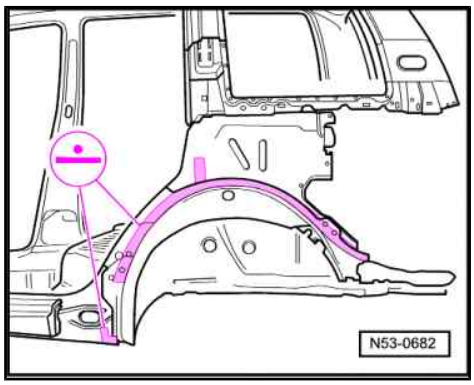

satelettronica

- Weld in wheel housing liner, RP spot weld seam.
- Adapt carrier panel to fit and hold in position.
- Butt weld parting cut, SG continuous weld seam.
- Spot weld remaining joint in, RP spot weld seam.
- Weld in side panel ⇒ page 109 .

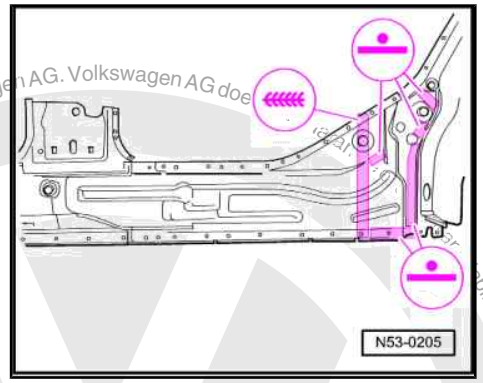

Protected by copyright. Copying for private or commercial purposes, in part or in whole, is not permitted unless authorised by Volkswagen AG. Volkswagen AG does not guarantee or accept any liability with respect to the correctness of information in this document. Copyright by Volkswagen AG.
satelettronica

RO: 53 69 55 50

15 Renewing outer wheel housing liner

WARNING

Observe safety notes!

– ⇒ General Information; Body Repairs, General Body Repairs ; Chapter 1 - Safety notes

15.1 Removing

Note

Leave an approx. 20 mm wide strip in area of front overlap -enlargement-

15.1.1 Cutting locations

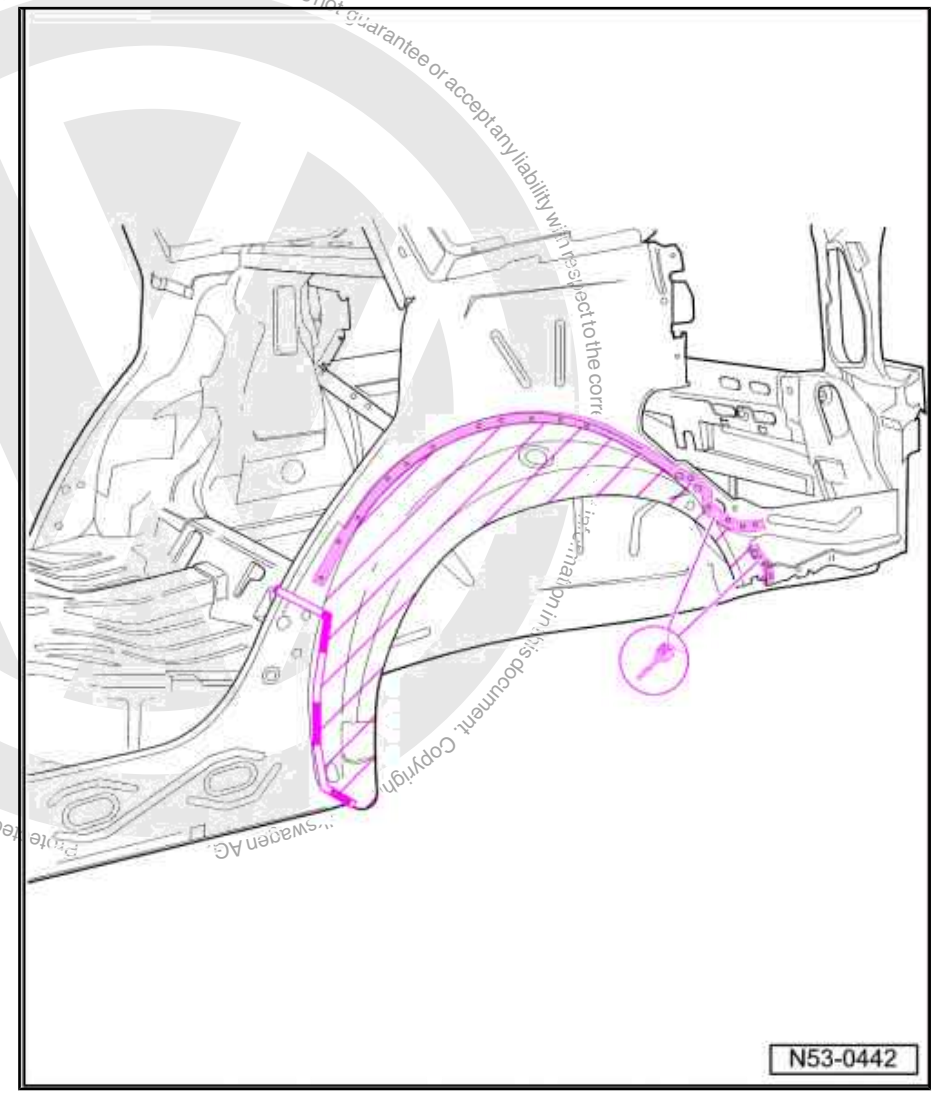

Protected by copyright. Copying for private or commercial purposes, in part or in whole, is not permitted unless authorised by Volkswagen AG. Volkswagen AG does not guarantee or accept any liability with respect to the correctness of information in this document. Copyright by Volkswagen AG.

satelettronica

– Cut out wheel housing liner.
– Remove remaining material.

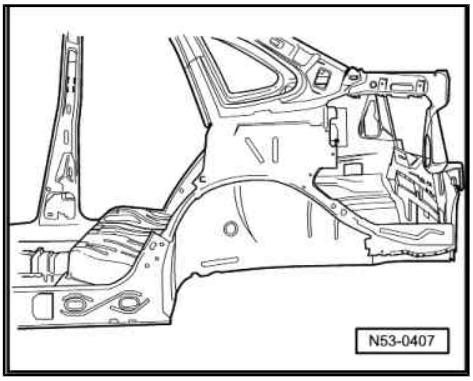

15.1.2 Replacement part

♦ Outer wheel housing liner

Preparing new part

– Transfer separating cut to new part plus 10 mm for overlap.
Cut off hatched area.

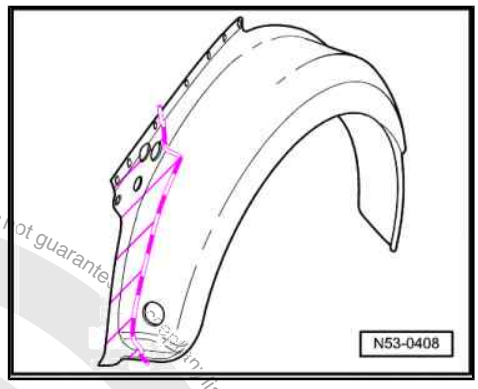

15.1.3 Welding in

– Adapt wheel housing liner to fit and hold in position.
– Spot weld wheel housing liner, RP spot weld seam.
– Weld parting cut, SG continuous weld seam.

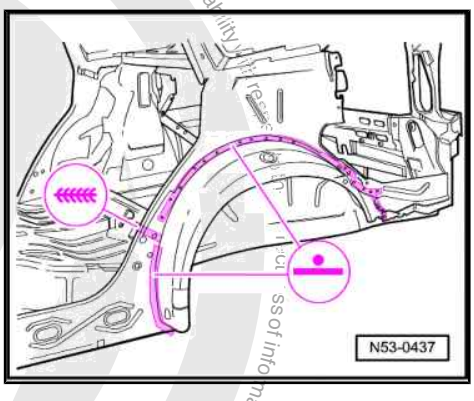

Protected by copyright. Copying for private or commercial purposes, in part or in whole, is not permitted unless authorised by Volkswagen AG. Volkswagen AG does not guarantee the accuracy of information in this document. Copyright by Volkswagen AG.
satelettronica

RO: 53 69 55 60

16 Renewing wheel housing liner (estate)

WARNING

Observe safety notes!

– ⇒ General Information; Body Repairs, General Body Repairs ; Chapter 1 - Safety notes

16.1 Removing

Note

Leave an approx. 20 mm wide strip in area of front overlap -enlargement-

16.1.1 Cutting locations

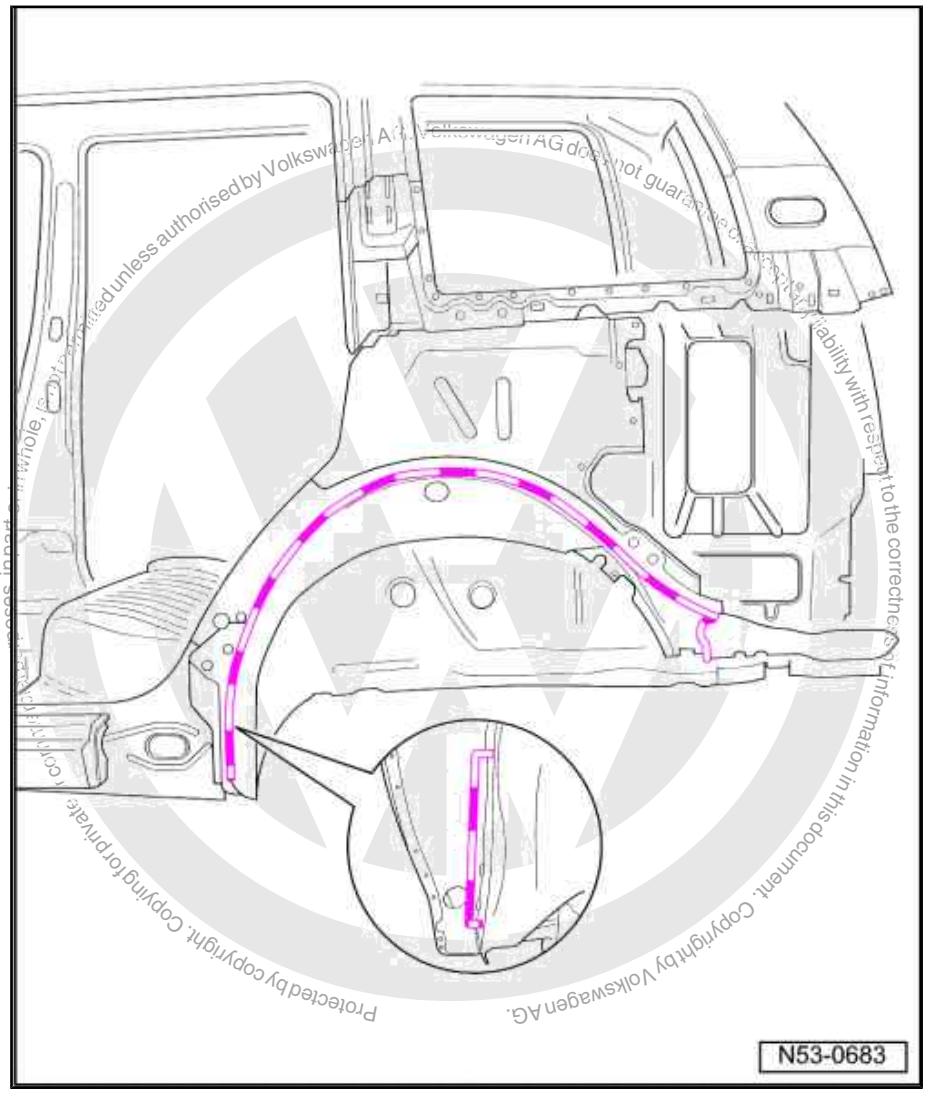

Protected by copyright. Copying for private or commercial purposes, in part or in whole, is not permitted unless authorised by Volkswagen AG. Volkswagen AG does not guarantee or accept any liability with respect to the correctness of information in this document. Copyright by Volkswagen AG.

satelettronica

– Cut out wheel housing liner.
– Remove remaining material.

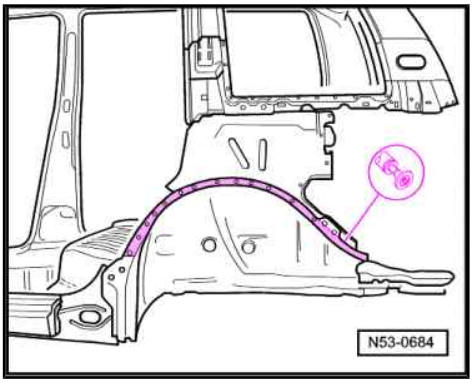

16.1.2 Replacement part

♦ Outer wheel housing liner

16.1.3 Welding in

Preparing new part

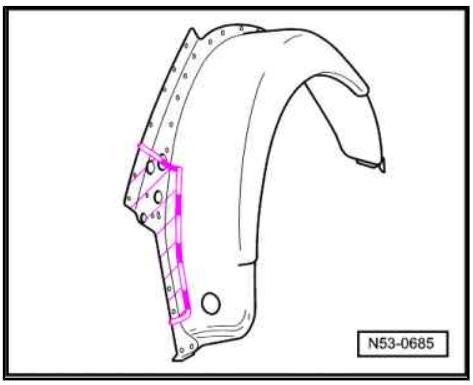

– Transfer separating cut to new part plus 10 mm for overlap. Cut off hatched area.
– Adapt wheel housing liner to fit, with side panel fitted and vehicle stress free, check gaps/shut lines.
– Remove side panel.
– Spot weld wheel housing liner, RP spot weld seam.
– Butt weld parting cut, SG continuous weld seam.
– Weld in side panel ⇒ page 109 .

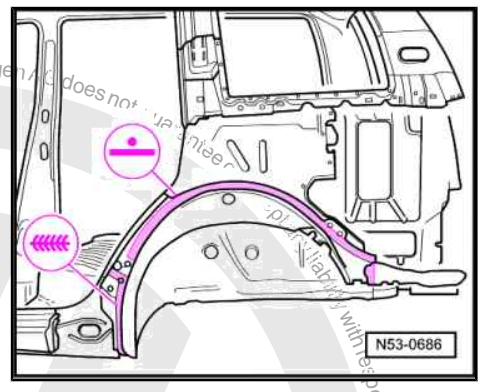

Protected by copyright. Copyright for private or commercial purposes, in part or in whole, is not permitted unless authorised by Volkswagen AG. Volkswagen AG does not guarantee or assume any liability with respect to the correctness of information in this document. Copyright by Volkswagen AG.
satelettronica

Protected by copyright. Copying for private or commercial purposes, in part or in whole, is not permitted unless authorised by Volkswagen AG. Volkswagen AG does not guarantee or accept any liability with respect to the correctness of information in this document. Copyright by Volkswagen AG.

RO: 53 70 55 60

17 Renewing mounting plate (estate)

WARNING

Observe safety notes!

– ⇒ General Information; Body Repairs, General Body Repairs ; Chapter 1 - Safety notes

17.1 Removing

17.1.1 Cutting locations

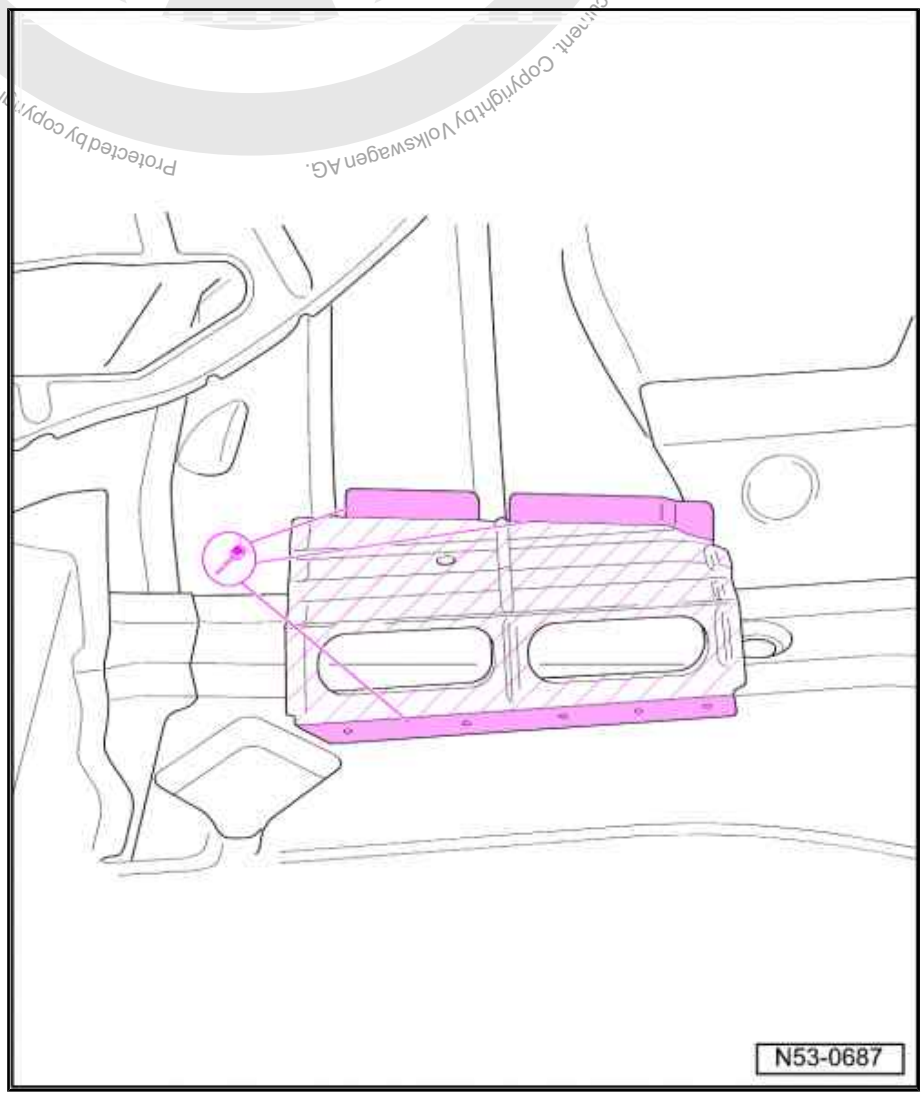

– Separate original joint.
– Remove remaining material.

satelettronica

17.1.2 Replacement part

- Mounting plate

Preparing new part

– Make holes in outer joint surface of new part.

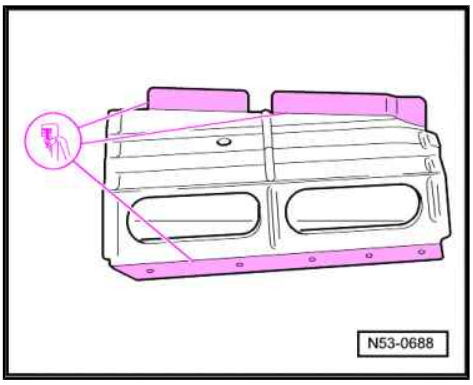

17.1.3 Welding in

– Adapt new part to fit and hold in position.

– Weld new part in, SG plug weld seam.

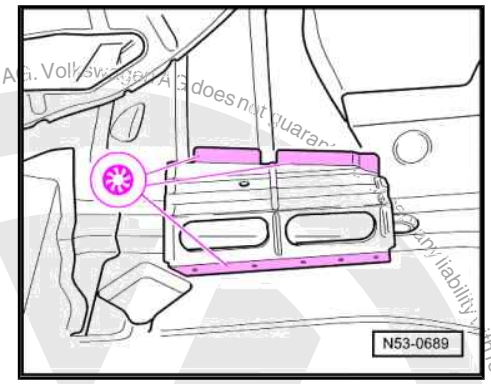

Protected by copyright. Copying for private or commercial purposes, in part or in whole, is not permitted unless authorised by Volkswagen AG. Volkswagen AG does not guarantee or accept any liability with respect to the correctness of information in this document. Copyright by Volkswagen AG.
satelettronica

RO: 53 82 55 60

18 Renewing rear cross member (estate)

WARNING

Observe safety notes!

– ⇒ General Information; Body Repairs, General Body Repairs ; Chapter 1 - Safety notes

18.1 Removing

18.1.1 Cutting locations

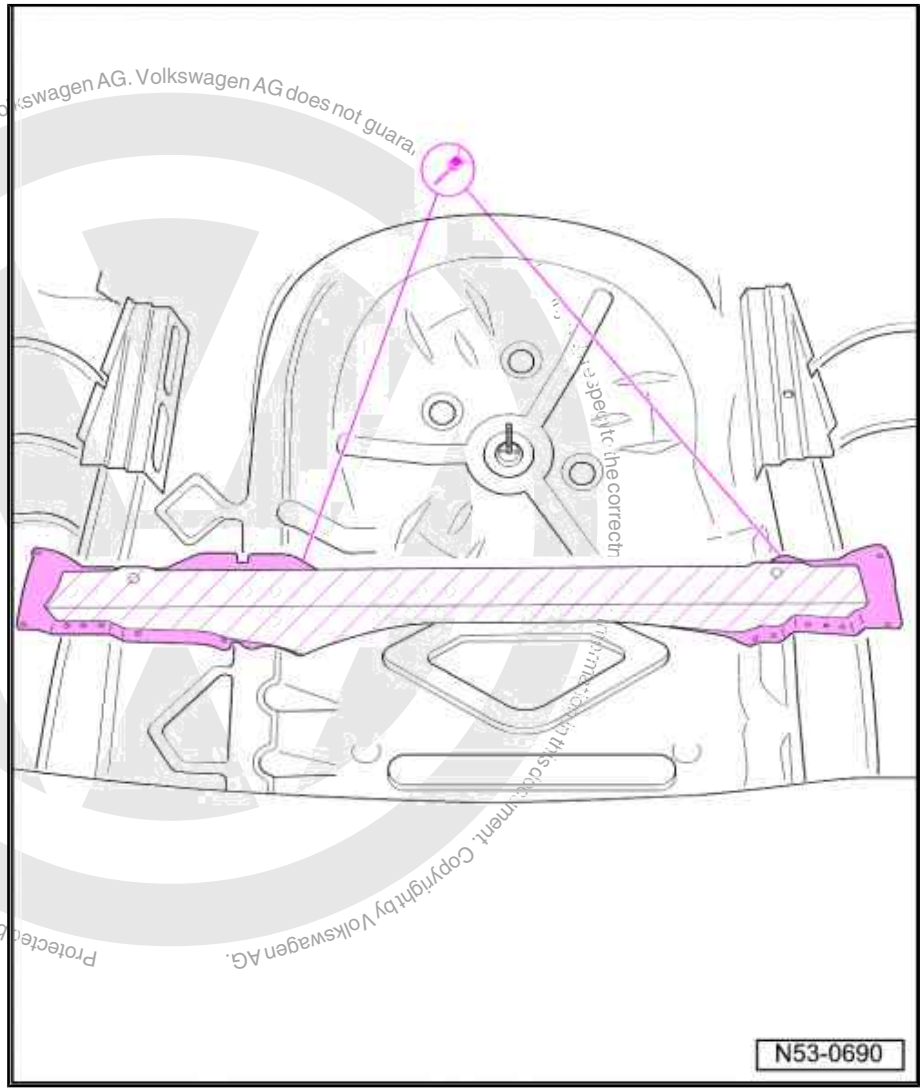

– Drill out spot welds.
– Remove remaining material.

Protected by copyright. Copying for private or commercial purposes, in part or in whole, is not permitted unless authorised by Volkswagen AG. Volkswagen AG does not guarantee or accept any liability with respect to the correctness of information in this document. Copyright by Volkswagen AG.
satelettronica

Protected by copyright. Copying for private or commercial purposes, in part or in whole, is not permitted unless authorised by Volkswagen AG. Volkswagen AG does not guarantee or accept any liability with respect to the correctness of information in this document. Copyright by Volkswagen AG.

18.1.2 Replacement parts

♦ Rear cross member

Preparing new part

– Drill 7 mm ∅ holes for SG plug weld seam.

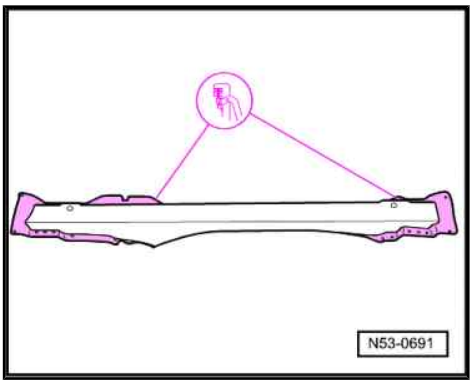

18.1.3 Welding in

– Adapt new part to fit and hold in position.

– Weld new part in, SG plug weld seam.

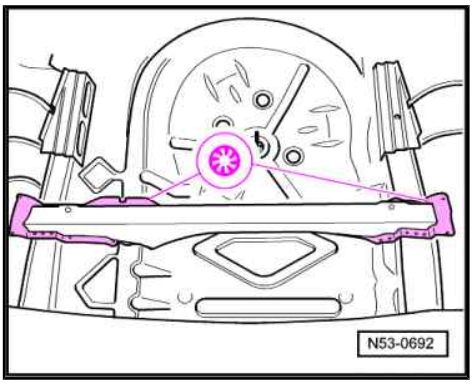

satelettronica